INPUT, OUTPUT, INPUT-OUTPUT, MANIPULATING AND CONTROL DEVICES

Technical description

26E, Kibalchicha Str., St Petersburg
Russia, 192174
Tel.: 8 (800) 100-67-19
Fax: +7 (812) 362-76-36
info@unicont.com
www.unicont.com

Table of contents

1 Introduction **4**

2 KEYBOARD WITH TRACKBALL TYPES TBK-1378-01, TBK-1378-03, TBK-1368-02, TBK-1368-04 ..... **5**

3 KEYBOARD WITH TRACKBALL TYPES TBK-1488-02, TBK-1498-03, TBK-1588-02, TBK-1598-03 ..... **7**

4 KEYBOARD WITH TRACKBALL TYPES TBK-1379-01, TBK-1379-03, TBK-1369-02, TBK-1369-04 ..... **9**

5 KEYBOARD WITH TRACKBALL TYPES TBK-2378-01, TBK-2378-03, TBK-2368-02, TBK-2368-04 ..... **11**

6 KEYBOARD WITH TRACKBALL TYPES TBK-2379-01, TBK-2379-03, TBK-2369-02, TBK-2369-04 ..... **13**

7 KEYBOARD WITH TRACKBALL TYPES TBK-1478-01, TBK-1478-03, TBK-1468-02, TBK-1468-04 ..... **15**

8 KEYBOARD WITH TRACKBALL TYPES TBK-1578-01, TBK-1578-03, TBK-1568-02, TBK-1568-04 ..... **17**

9 KEYBOARD WITH TRACKBALL TYPES TBK-1579-01, TBK-1579-03, TBK-1569-02, TBK-1569-04 ..... **19**

10 KEYBOARD WITH TOUCHPAD TYPES TCK-1378-01, TCK-1378-03, TCK-1368-02, TCK-1368-04 ..... **21**

11 KEYBOARD WITH TOUCHPAD TYPES TCK-1379-01, TCK-1379-03, TCK-1369-02, TCK-1369-04 ..... **23**

12 KEYBOARD WITH TOUCHPAD TYPES TCK-2378-01, TCK-2378-03, TCK-2368-02, TCK-2368-04 ..... **25**

13 KEYBOARD WITH TOUCHPAD TYPES TCK-2379-01, TCK-2379-03, TCK-2369-02, TCK-2369-04 ..... **27**

14 KEYBOARD WITH TOUCHPAD TYPES TCK-1478-01, TCK-1478-03, TCK-1468-02, TCK-1468-04 ..... **29**

15 KEYBOARD WITH TOUCHPAD TYPES TCK-1578-01, TCK-1578-03, TCK-1568-02, TCK-1568-04 ..... **31**

16 KEYBOARD WITH TOUCHPAD TYPES TCK-1579-01, TCK-1579-03, TCK-1569-02, TCK-1569-04 ..... **33**

17 KEYBOARD TYPES К-1378-01, К-1378-03, К-1368-02, К-1368-04 ..... **35**

18 KEYBOARD TYPES К-1578-01, К-1578-03, К-1568-02, К-1568-04 37

19 KEYBOARD TYPES К-1478-01, К-1478-03, К-1468-02, К-1468-04 39

20 KEYBOARD TYPES К-1379-01, К-1379-03, К-1369-02, К-1369-04 41

21 KEYBOARD TYPES К-1579-01, К-1579-03, К-1569-02, К-1569-04 43

22 KEYBOARD TYPES К-2379-01, К-2379-03, К-2369-02, К-2369-04 45

23 TRACKBALL MANIPULATOR TYPES TBM-2378-01, TBM-2378-03, TBM-2368-02, TBM-2368-04 47

24 TRACKBALL MANIPULATOR TYPES TBM-2379-01, TBM-2379-03, TBM-2369-02, TBM-2369-04 49

25 TRACKBALL MANIPULATOR TYPES TBM-1478-01, TBM-1478-03, TBM-1468-02, TBM-1468-04 51

26 TRACKBALL MANIPULATOR TYPES TBM-23678 53

27 TOUCHPAD MANIPULATOR TYPES TCM-2379-01, TCM-2379-03, TCM-2369-02, TCM-2369-04 55

28 COMPUTER MOUSE TYPES M-1568-02, M-1568-04 57

INTRODUCTION

This document describes input, output, input-output, manipulating and control devices.

This document contains information on the design, operation principle, and technical specifications of the products produced by NPK MSA LLC.

Input, output, input-output, manipulating and control devices are intended to operate as a main component of personal computer, and to ensure control and enter text data while working with operating system installed on the computer.

KEYBOARD WITH TRACKBALL TYPES TBK-1378-01, TBK-1378-03, TBK-1368-02, TBK-1368-04

Certificates

Description

Keyboard with trackball consists of a set of keys placed in particular order that allows a person to input information, and a trackball, a rotating ball in the fixed housing that allows a person to position a cursor on the screen.

Certified as a part of Marine panel personal computer types MVPC-xx04, MVPC-xx05, MVPC-xx06, MVPC-xx07.

Technical specifications

Parameter	TBK-1368-02	TBK-1368-04	TBK-1378-01	TBK-1378-03
Type of connectors[1]	standard	protective	protective	standard
Interface	USB		PS/2	
Number of keyboard keys, pcs.	105			
Number of trackball keys, pcs.	2			
Key life, mln. clicks	min. 3			
Key travel, mm	0.3			
Keystroke force, N	2.6			
Layout	English or Russian			
Type of trackball	optical			
Ball diameter, mm	50			
Rotation force, g	80			
Trackball life, mln. rotations	6			
Mounting	panel			
Protection degree	IP54 (front panel)			
Operating temperature, °C	–15 to +55			
Limiting temperature, °C	–60 to +70			
Weight, kg	1.6			
Housing material	aluminum			
Ball material	phenol resin			

[1] Applied protective connectors: 2РМТ14КПН4Ш1В1В for USB interface, РС7ТВ for PS/2 interface.

Dimensional and installation specifications

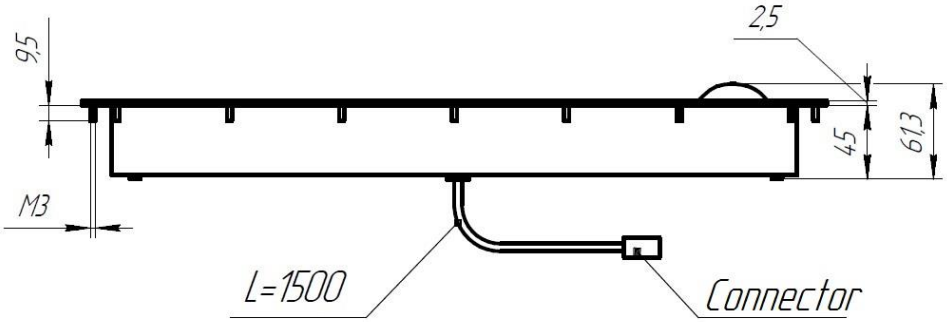

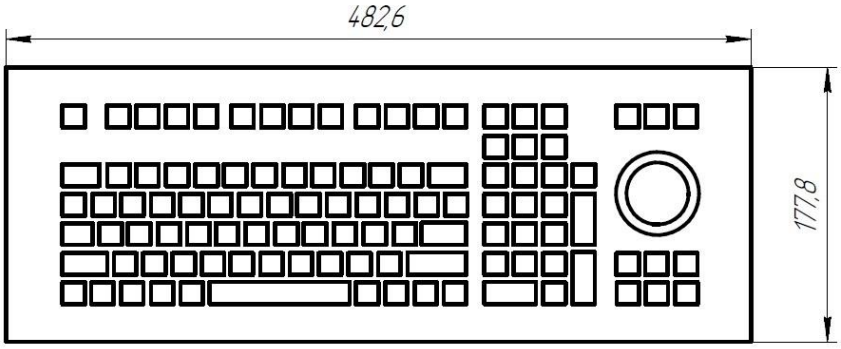

Mounting cutout

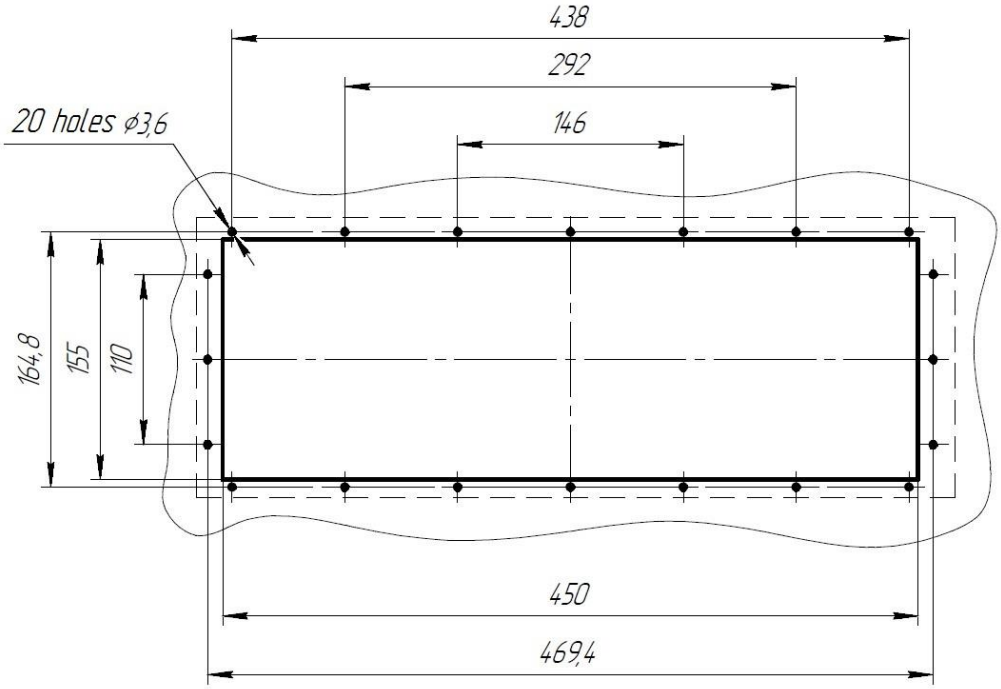

KEYBOARD WITH TRACKBALL TYPES TBK-1488-02, TBK-1498-03, TBK-1588-02, TBK-1598-03

Certificates

Description

Keyboard with trackball consists of a set of keys placed in particular order that allows a person to input information, and a trackball, a rotating ball in the fixed housing that allows a person to position a cursor on the screen.

Certified as a part of Marine panel personal computer types MVPC-xx04, MVPC-xx05, MVPC-xx06, MVPC-xx07.

Technical specifications

Parameter	TBK-1488-02	TBK-1498-03	TBK-1588-02	TBK-1598-03
Type of connectors[1)]	standard			
Interface	USB	PS/2	USB	PS/2
Number of keyboard keys, pcs.	92			
Number of trackball keys, pcs.	3			
Key life, mln. clicks	min. 3			
Key travel, mm	0.3			
Keystroke force, N	2.55			
Layout	English or Russian			
Type of trackball	optical			
Ball diameter, mm	50			
Rotation force, g	80			
Trackball life, mln. rotations	6			
Mounting	panel		desktop	
Protection degree	IP54 (front panel)			
Operating temperature, °C	–15 to +55			
Limiting temperature, °C	–60 to +70			
Weight, kg	1.6			
Housing material	aluminum			
Trackball material	phenol resin			

[1)] Applied protective connectors: 2РМТ14КПН4Ш1В1В for USB interface, РС7ТВ for PS/2 interface.

Dimensional and installation specifications

TBK-1488-02 , TBK-1498-03

TBK-1588-02, TBK-1598-03

KEYBOARD WITH TRACKBALL TYPES TBK-1379-01, TBK-1379-03, TBK-1369-02, TBK-1369-04

Certificates

Description

Keyboard with trackball consists of a set of keys placed in particular order that allows a person to input information, and a trackball, a rotating ball in the fixed housing that allows a person to position a cursor on the screen.

Certified as a part of Marine panel personal computer types MVPC-xx04, MVPC-xx05, MVPC-xx06, MVPC-xx07.

Technical specifications

Parameter	TBK-1369-02	TBK-1369-04	TBK-1379-01	TBK-1379-03
Type of connector[1)]	standard	protective	protective	standard
Interface	USB		PS/2	
Number of keyboard keys, pcs.	88			
Number of trackball keys, pcs.	2			
Key life, mln. clicks	min. 3			
Key travel, mm	0.3			
Keystroke force, N	2.6			
Layout	English or Russian			
Type of trackball	mechanical			
Ball diameter, mm	38			
Rotation force, g	50			
Trackball life, mln. rotations	6			
Mounting	panel			
Protection degree	IP54 (front panel)			
Operating temperature, °C	–15 to +55			
Limiting temperature, °C	–60 to +70			
Weight, kg	1.2			
Housing material	aluminum			
Trackball material	phenol resin			

[1)] Applied protective connectors: 2РМТ14КПН4Ш1В1В for USB interface, РС7ТВ for PS/2 interface.

Dimensional and installation specifications

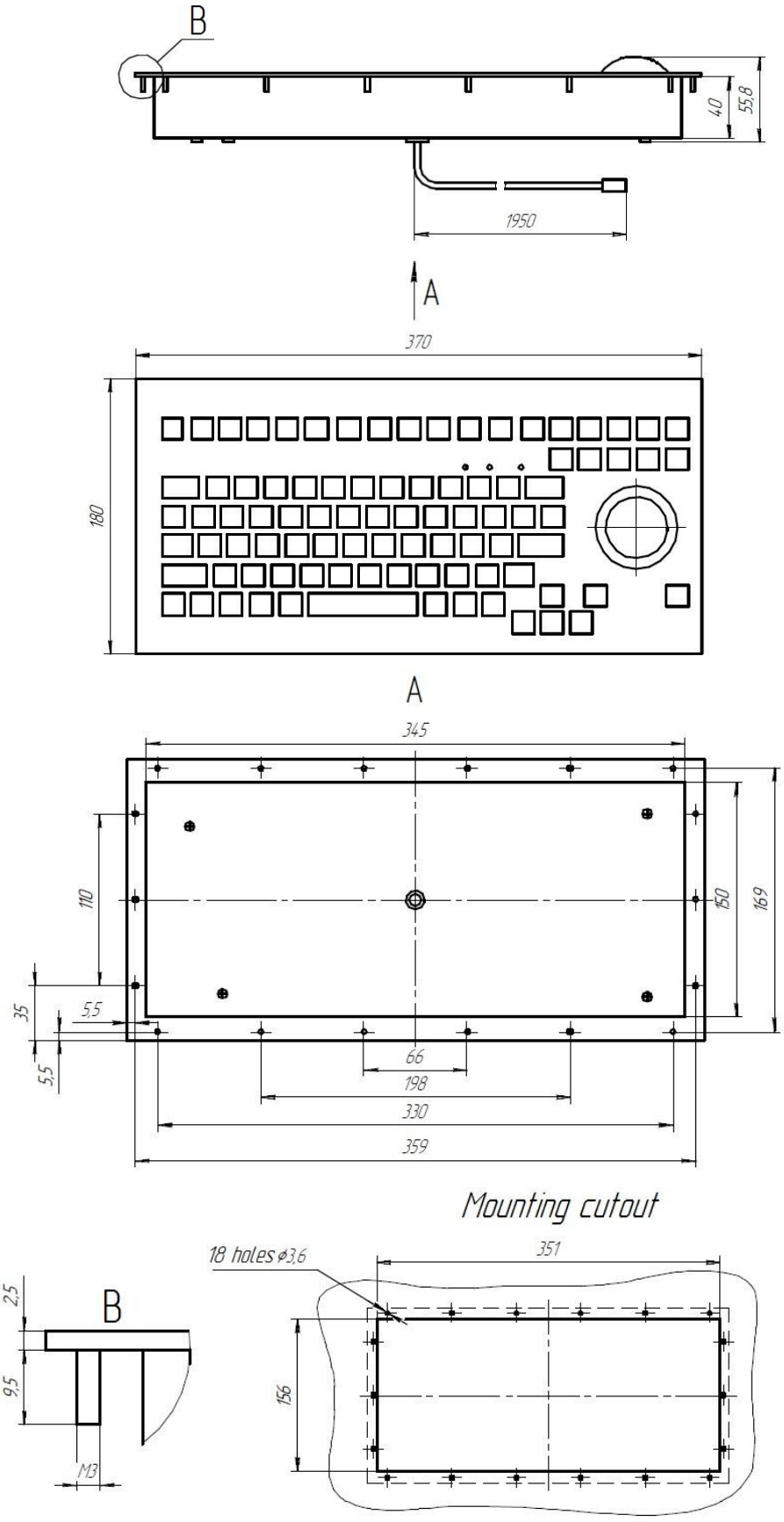

KEYBOARD WITH TRACKBALL TYPES TBK-2378-01, TBK-2378-03, TBK-2368-02, TBK-2368-04

Certificates

Description

Keyboard with trackball consists of a set of keys placed in particular order that allows a person to input information, and a trackball, a rotating ball in the fixed housing that allows a person to position a cursor on the screen.

Certified as a part of Marine panel personal computer types MVPC-xx04, MVPC-xx05, MVPC-xx06, MVPC-xx07.

Technical specifications

Parameter	TBK-2368-02	TBK-2368-04	TBK-2378-01	TBK-2378-03
Type of connectors[1)]	standard	protective	protective	standard
Interface	USB		PS/2	
Number of keyboard keys, pcs.	105			
Number of trackball keys, pcs.	3			
Key life, mln. clicks	min. 10			
Key travel, mm	1.5			
Keystroke force, N	1			
Layout	English or Russian			
Type of trackball	mechanical			
Ball diameter, mm	38			
Rotation force, g	50			
Trackball life, mln. rotations	6			
Mounting	panel			
Protection degree	IP54 (front panel)			
Operating temperature, °C	–15 to +55			
Limiting temperature, °C	–60 to +70			
Weight, kg	2.65			
Housing material	stainless steel			
Trackball material	stainless steel			

[1)] Applied protective connectors: 2РМТ14КПН4Ш1В1В for USB interface, РС7ТВ for PS/2 interface.

Dimensional and installation specifications

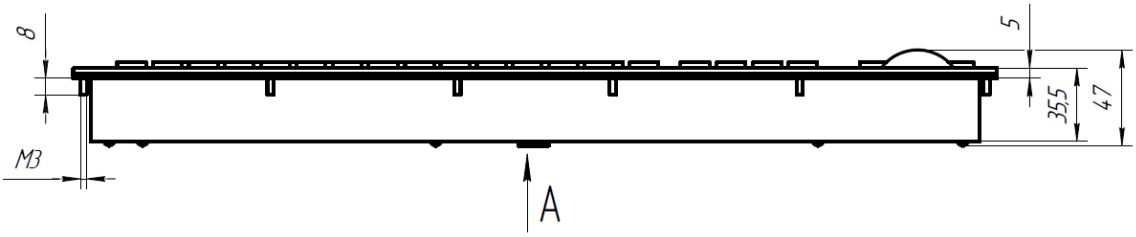

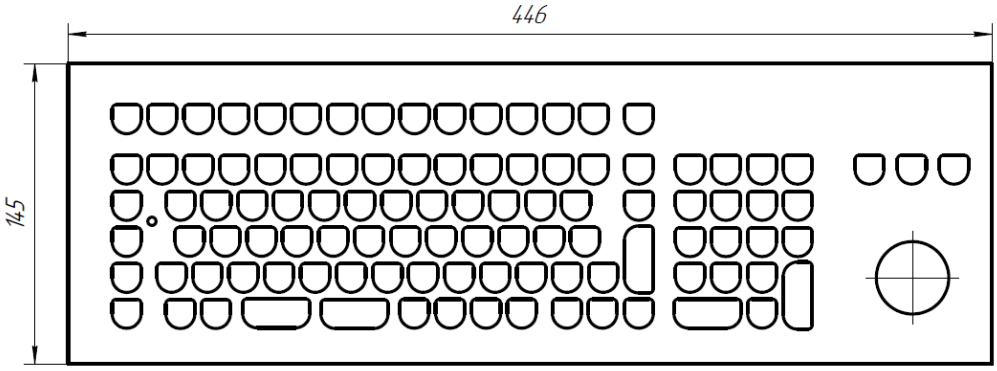

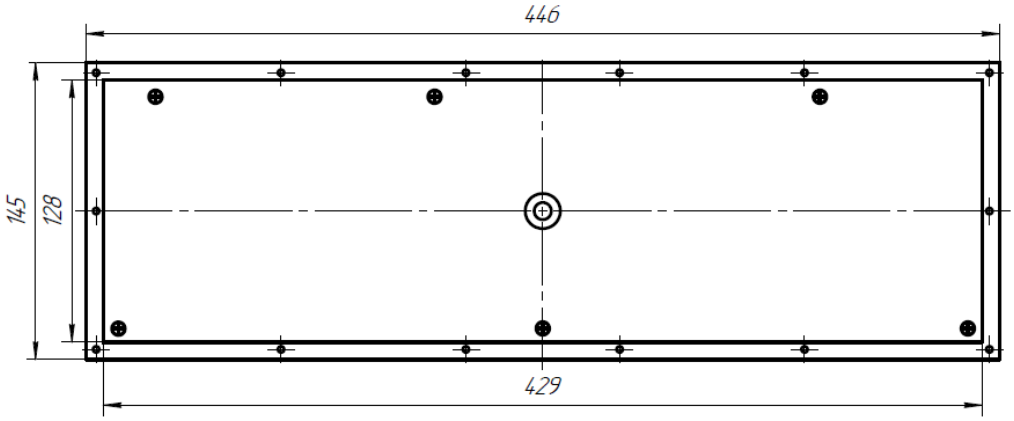

Mounting cutout

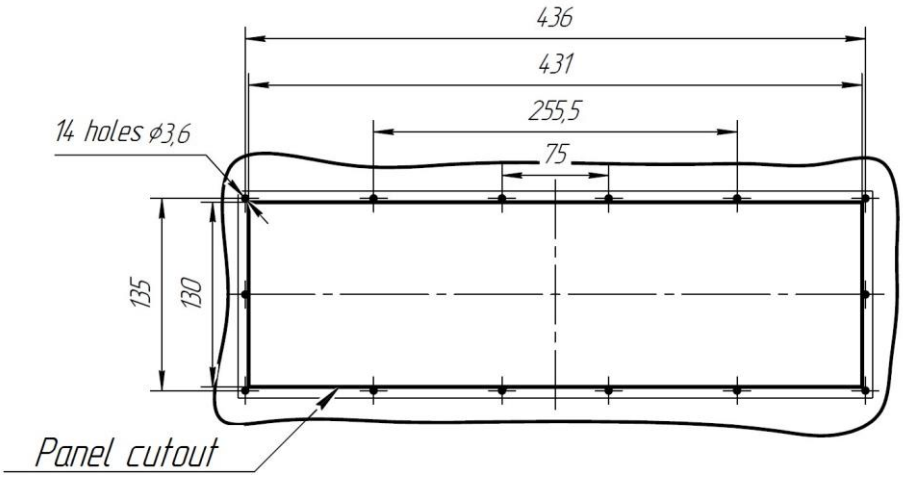

KEYBOARD WITH TRACKBALL TYPES TBK-2379-01, TBK-2379-03, TBK-2369-02, TBK-2369-04

Certificates

Description

Keyboard with trackball consists of a set of keys placed in particular order that allows a person to input information, and a trackball, a rotating ball in the fixed housing that allows a person to position a cursor on the screen.

Certified as a part of Marine panel personal computer types MVPC-xx04, MVPC-xx05, MVPC-xx06, MVPC-xx07.

Technical specifications

Parameter	TBK-2369-02	TBK-2369-04	TBK-2379-01	TBK-2379-03
Type of connectors[1)]	standard	protective	protective	standard
Interface	USB		PS/2	
Number of keyboard keys, pcs.	84			
Number of trackball keys, pcs.	3			
Key life, mln. clicks	min. 10			
Key travel, mm	1.5			
Keystroke force, N	1			
Layout	English or Russian			
Trackball type	mechanical			
Ball diameter, mm	25			
Rotation force, g	50			
Trackball life, mln. rotations	6			
Mounting	panel			
Protection degree	IP54 (front panel)			
Operating temperature, °C	–15 to +55			
Limiting temperature, °C	–60 to +70			
Weight, kg	2.2			
Housing material	stainless steel			
Trackball material	stainless steel			

[1)] Applied protective connectors: 2РМТ14КПН4Ш1В1В for USB interface, РС7ТВ for PS/2 interface.

Dimensional and installation specifications

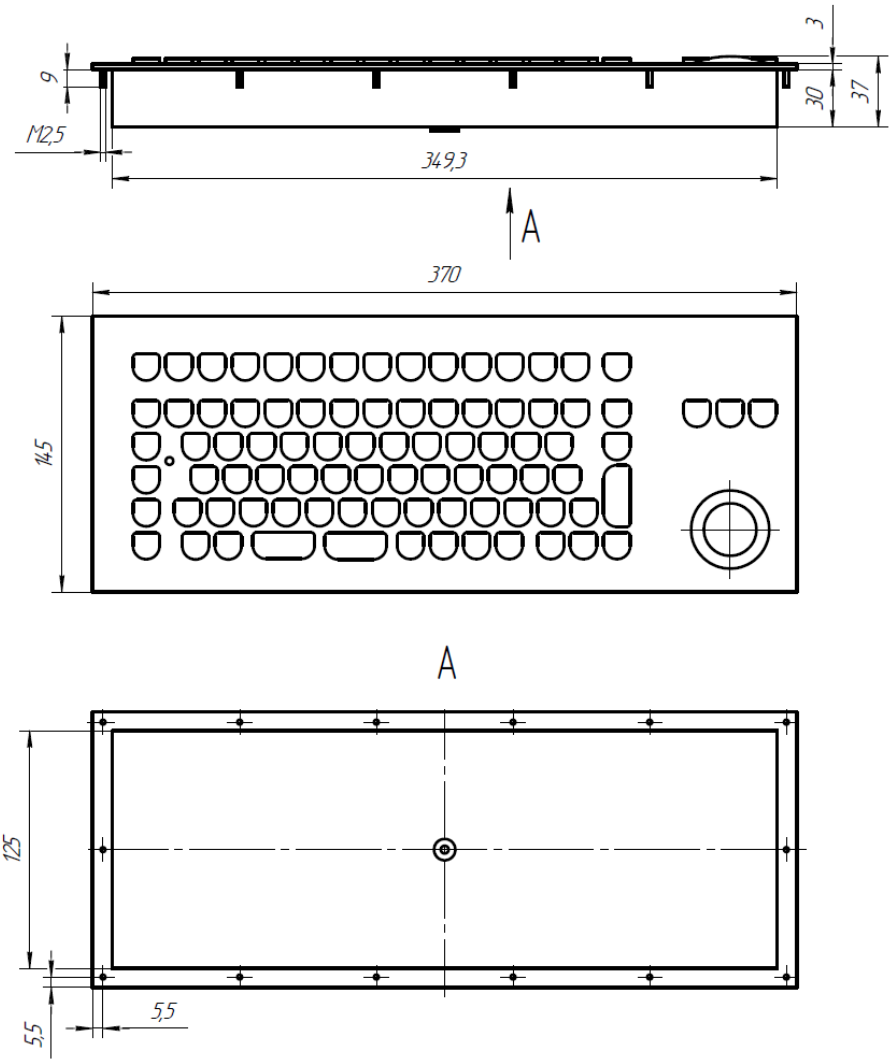

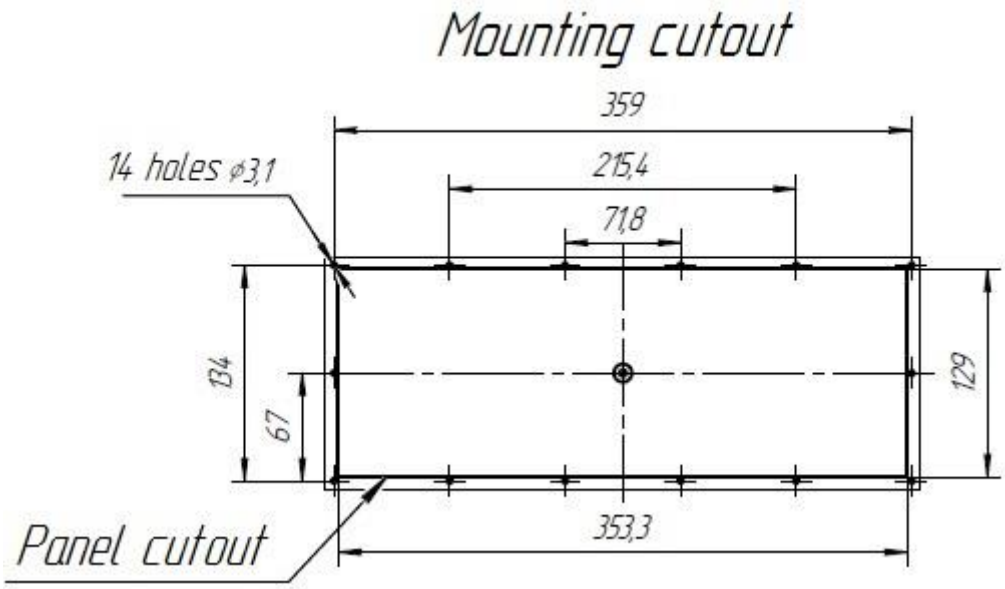

KEYBOARD WITH TRACKBALL TYPES TBK-1478-01, TBK-1478-03, TBK-1468-02, TBK-1468-04

Certificates

Description

Keyboard with trackball consists of a set of keys placed in particular order that allows a person to input information, and a trackball, a rotating ball in the fixed housing that allows a person to position a cursor on the screen.

Certified as a part of Marine panel personal computer types MVPC-xx04, MVPC-xx05, MVPC-xx06, MVPC-xx07.

Technical specifications

Parameter	TBK-1468-02	TBK-1468-04	TBK-1478-01	TBK-1478-03
Type of connectors[1)]	standard	protective	protective	standard
Interface	USB		PS/2	
Number of keyboard keys, pcs.	105			
Number of trackball keys, pcs.	2			
Key life, mln. clicks	min. 3			
Key travel, mm	0.3			
Keystroke force, N	2.6			
Layout	English and Russian			
Trackball type	optical			
Ball diameter, mm	50			
Rotation force, g	80			
Trackball life, mln. rotations	6			
Mounting	panel			
Protection degree	IP54 (front panel)			
Operating temperature, °C	–15 to +55			
Limiting temperature, °C	–60 to +70			
Weight, kg	1.6			
Housing material	aluminum			
Trackball material	phenol resin			

[1)] Applied protective connectors: 2PMT14KПH4Ш1B1B for USB interface, PC7TB for PS/2 interface.

Dimensional and installation specifications

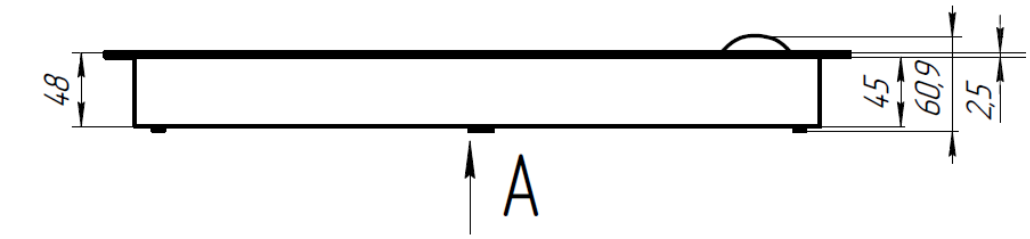

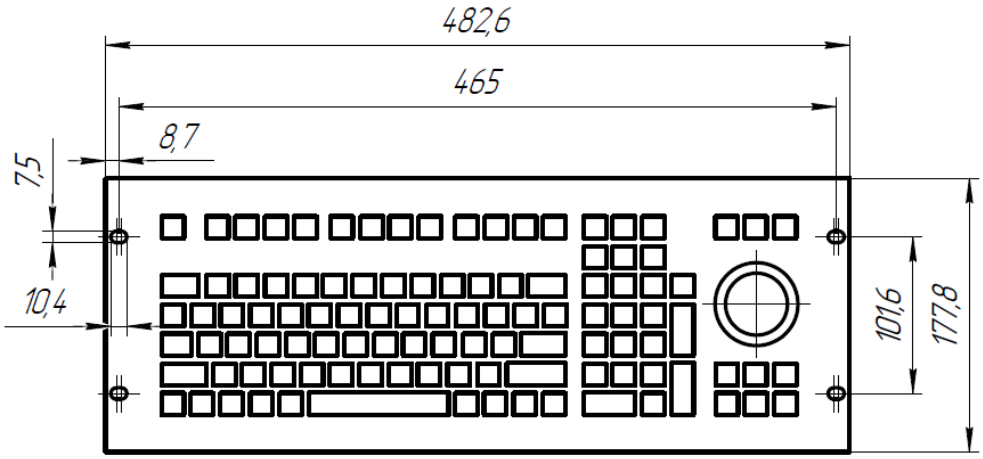

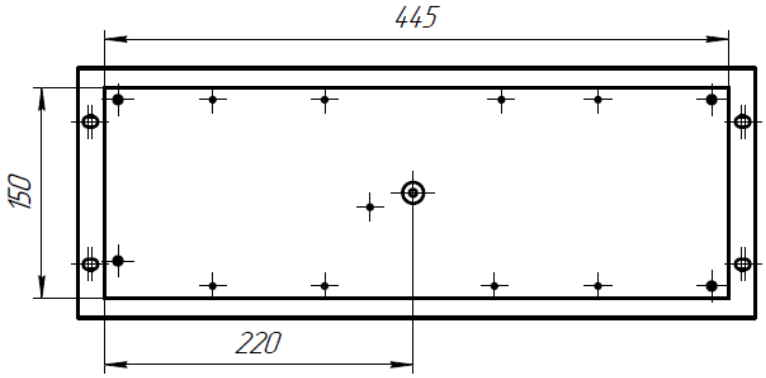

Mounting cutout

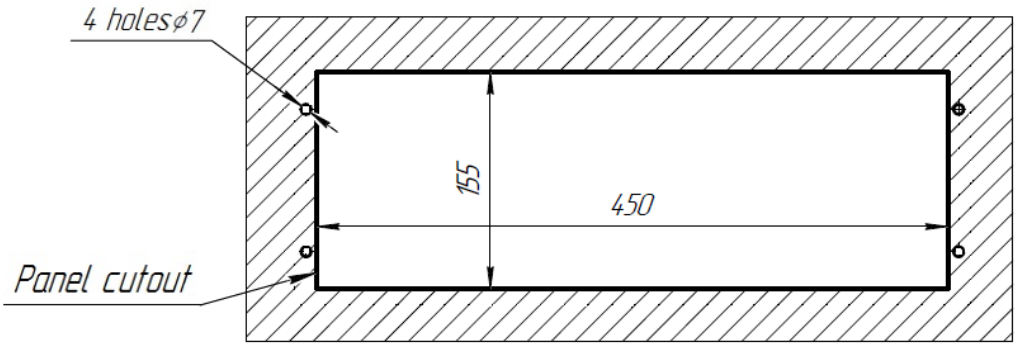

KEYBOARD WITH TRACKBALL TYPES TBK-1578-01, TBK-1578-03, TBK-1568-02, TBK-1568-04

Certificates

Description

Keyboard with trackball consists of a set of keys placed in particular order that allows a person to input information, and a trackball, a rotating ball in the fixed housing that allows a person to position a cursor on the screen.

Certified as a part of Marine panel personal computer types MVPC-xx04, MVPC-xx05, MVPC-xx06, MVPC-xx07.

Technical specifications

Parameter	TBK-1568-02	TBK-1568-04	TBK-1578-01	TBK-1578-03
Type of connectors[1)]	standard	protective	protective	standard
Interface	USB		PS/2	
Number of keyboard keys, pcs.	105			
Number of trackball keys, pcs.	2			
Key life, mln. clicks	min. 3			
Key travel, mm	0.3			
Keystroke force, N	2.6			
Layout	English or Russian			
Trackball type	mechanical			
Ball diameter, mm	38			
Rotation force, g	50			
Trackball life, mln. rotations	6			
Mounting	desktop			
Protection degree	IP54			
Operating temperature, °C	–15 to +55			
Limiting temperature, °C	–60 to +70			
Weight, kg	1.5			
Housing material	ABS plastic			
Trackball material	phenol resin			

[1)] Applied protective connectors: 2РМТ14КПН4Ш1В1В for USB interface, РС7ТВ for PS/2 interface.

Dimensional and installation specifications

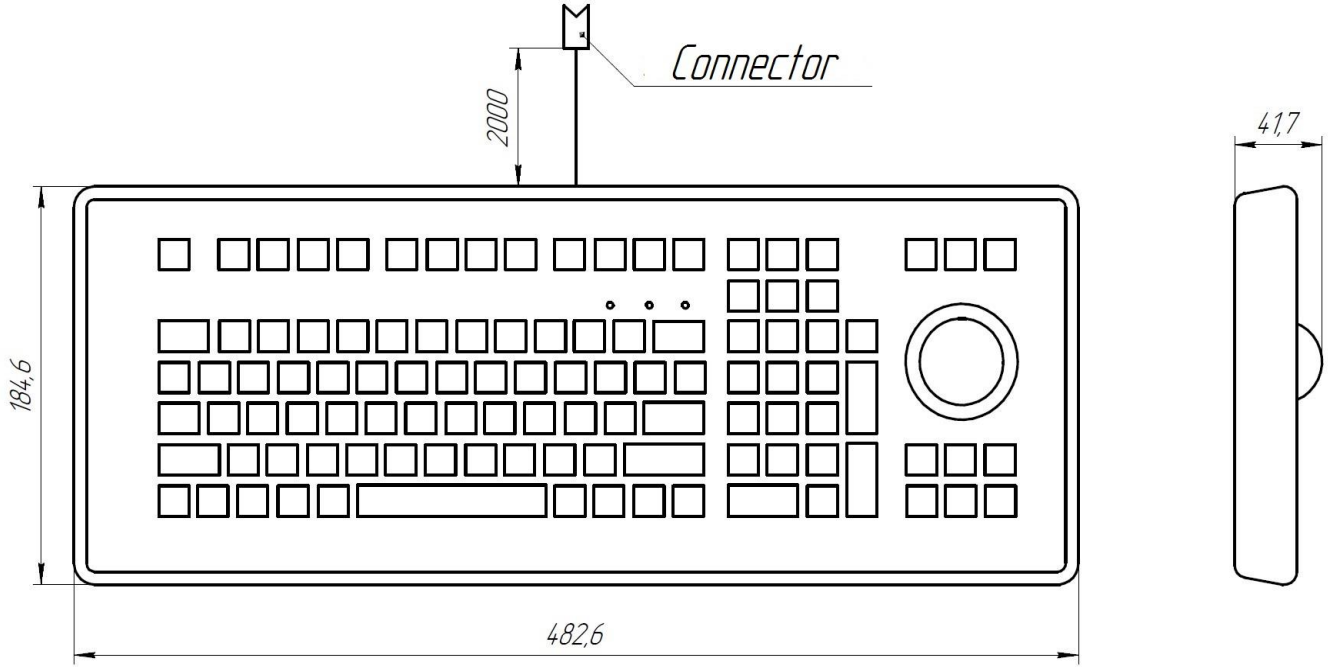

KEYBOARD WITH TRACKBALL TYPES TBK-1579-01, TBK-1579-03, TBK-1569-02, TBK-1569-04

Certificates

Description

Keyboard with trackball consists of a set of keys placed in particular order that allows a person to input information, and a trackball, a rotating ball in the fixed housing that allows a person to position a cursor on the screen.

Certified as a part of Marine panel personal computer types MVPC-xx04, MVPC-xx05, MVPC-xx06, MVPC-xx07.

Technical specifications

Parameter	TBK-1569-02	TBK-1569-04	TBK-1579-01	TBK-1579-03
Type of connectors[1)]	standard	protective	protective	standard
Interface	USB		PS/2	
Number of keyboard keys, pcs.	88			
Trackball keys, pcs.	2			
Key life, mln. clicks	min. 3			
Key travel, mm	0.3			
Keystroke force, N	2.6			
Layout	English and Russian			
Trackball type	mechanical			
Ball diameter, mm	38			
Rotation force, g	50			
Trackball life, mln. rotations	6			
Mounting	desktop			
Protection degree	IP54			
Operating temperature, °C	–15 to +55			
Limiting temperature, °C	–60 to +70			
Weight, kg	1.1			
Housing material	ABS plastic			
Trackball material	phenol resin			

[1)] Applied protective connectors: 2РМТ14КПН4Ш1В1В for USB interface, РС7ТВ for PS/2 interface.

Dimensional and installation specifications

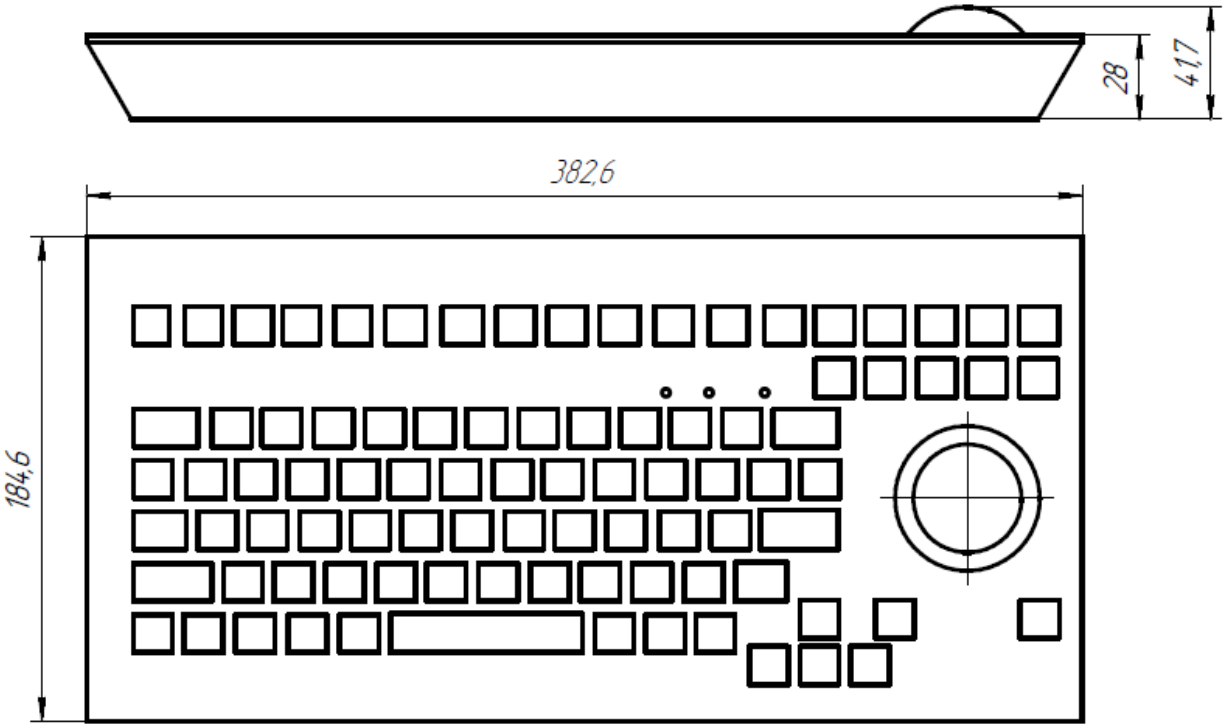

KEYBOARD WITH TOUCHPAD TYPES TCK-1378-01, TCK-1378-03, TCK-1368-02, TCK-1368-04

Cerificates

Description

Keyboard with touchpad consists of a set of keys placed in particular order that allows a person to input information, and a touchpad intended to position a cursor on the screen and enter commands.

Certified as a part of Marine panel personal computer types MVPC-xx04, MVPC-xx05, MVPC-xx06, MVPC-xx07.

Technical specifications

Parameter	TCK-1368-02	TCK-1368-04	TCK-1378-01	TCK-1378-03
Type of connectors[1)]	standard	protective	protective	standard
Interface	USB		PS/2	
Number of keyboard keys, pcs.	105			
Number of touchpad keys, pcs.	2			
Key life, mln. clicks	min. 3			
Key travel, mm	0.3			
Keystroke force, N	2.6			
Layout	English or Russian			
Touchpad type	capacitive			
Touchpad active area, mm	59x42			
Touchpad resolution, dpi	100 - 300			
Mounting	panel			
Protection degree	IP54 (front panel)			
Operating temperature, °C	–15 to +55			
Limiting temperature, °C	–60 to +70			
Weight, kg	1.2			
Material	aluminum			

[1)] Applied protective connectors: 2РМТ14КПН4Ш1В1В for USB interface, РС7ТВ for PS/2 interface.

Dimensional and installation specifications

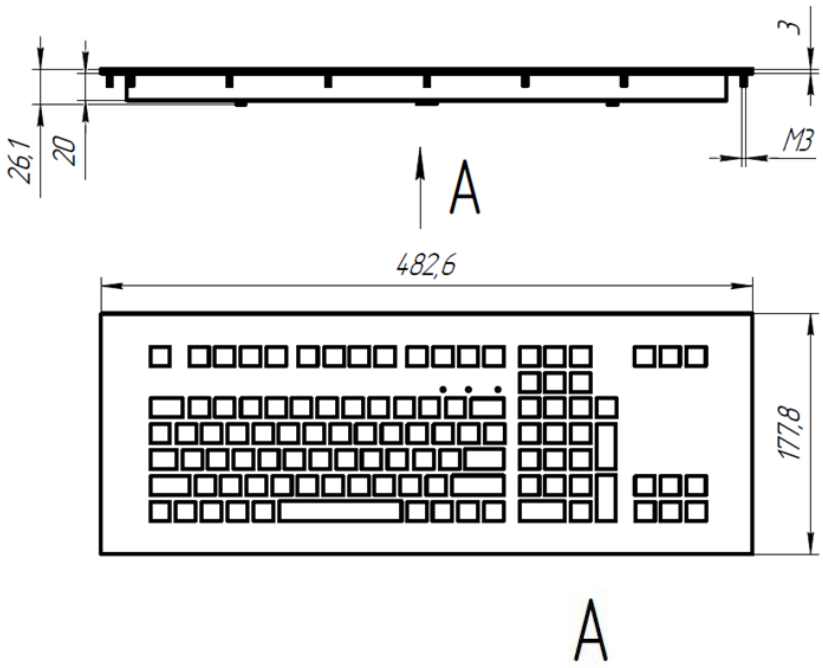

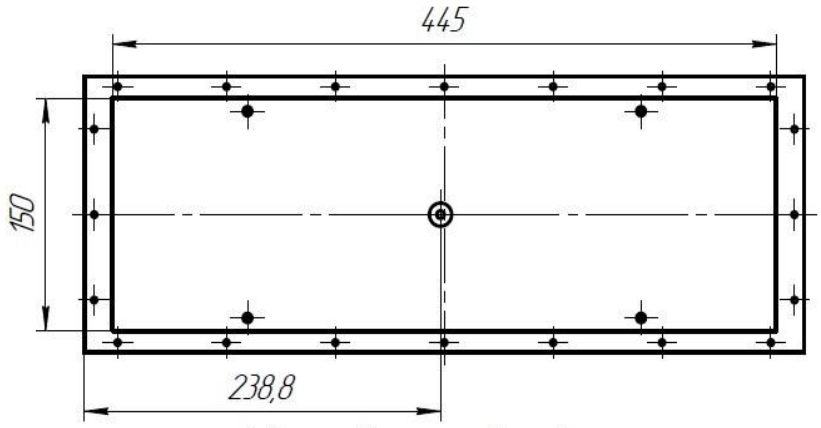

Mounting cutout

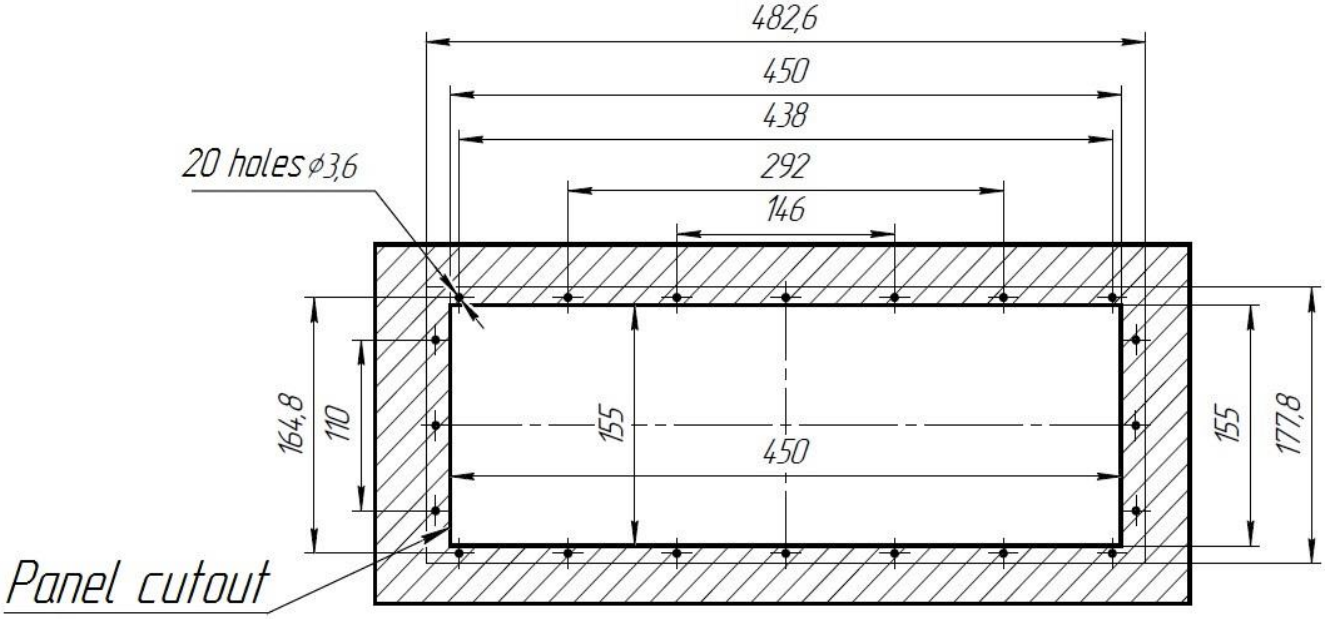

Panel cutout

KEYBOARD WITH TOUCHPAD TYPES TCK-1379-01, TCK-1379-03, TCK-1369-02, TCK-1369-04

Certificates

Description

Keyboard with touchpad consists of a set of keys placed in particular order that allows a person to input information, and a touchpad intended to position a cursor on the screen and enter commands.

Certified as a part of Marine panel personal computer types MVPC-xx04, MVPC-xx05, MVPC-xx06, MVPC-xx07.

Technical specifications

Parameter	TCK-1369-02	TCK-1369-04	TCK-1379-01	TCK-1379-03
Type of connectors[1)]	standard	protective	protective	standard
Interface	USB		PS/2	
Number of keyboard keys, pcs.	88			
Number of touchpad keys, pcs.	2			
Key life, mln. clicks	min. 3			
Key travel, mm	0.3			
Keystroke force, N	2.6			
Layout	English or Russian			
Touchpad type	capacitive			
Touchpad active area, mm	59x42			
Touchpad resolution, dpi	100 - 300			
Mounting	panel			
Protection degree	IP54 (front panel)			
Operating temperature, °C	–15 to +55			
Limiting temperature, °C	–60 to +70			
Weight, kg	1.0			
Material	aluminum			

[1)] Applied protective connectors: 2РМТ14КПН4Ш1В1В for USB interface, РС7ТВ for PS/2 interface.

Dimensional and installation specifications

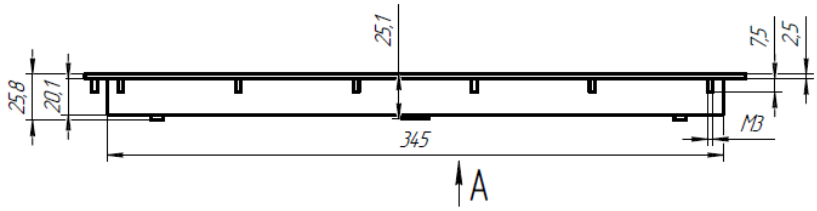

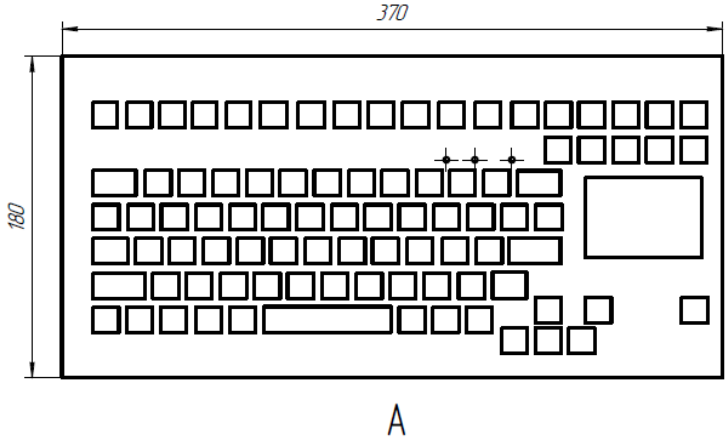

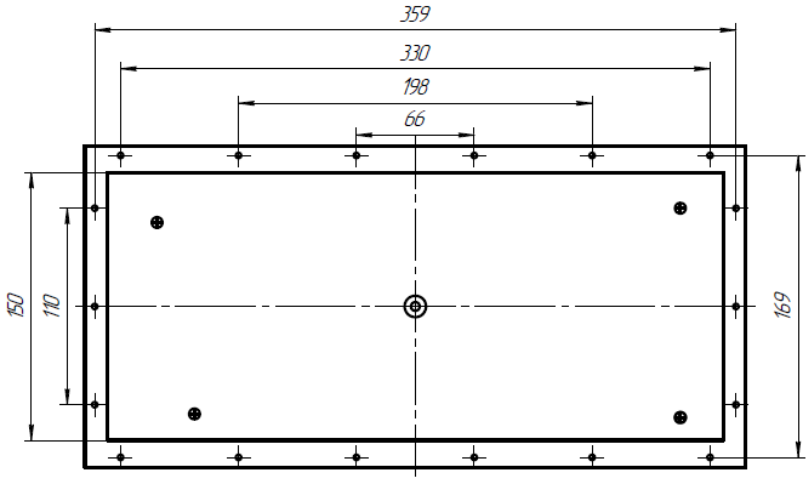

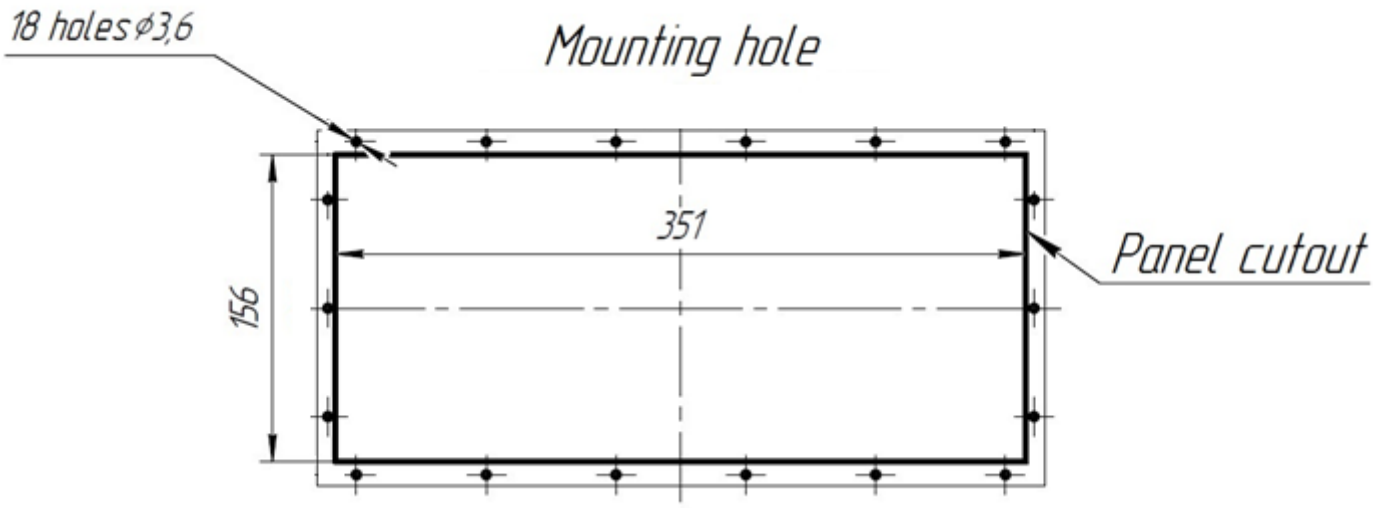

KEYBOARD WITH TOUCHPAD TYPES TCK-2378-01, TCK-2378-03, TCK-2368-02, TCK-2368-04

Certificates

Description

Keyboard with touchpad consists of a set of keys placed in particular order that allows a person to input information, and a touchpad intended to position a cursor on the screen and enter commands.

Certified as a part of Marine panel personal computer types MVPC-xx04, MVPC-xx05, MVPC-xx06, MVPC-xx07.

Technical specifications

Parameter	TCK-2368-02	TCK-2368-04	TCK-2378-01	TCK-2378-03
Type of connectors[1)]	standard	protective	protective	standard
Interface	USB		PS/2	
Number of keyboard keys, pcs.	105			
Number of touchpad keys, pcs.	2			
Key life, mln. clicks	min. 10			
Key travel, mm	1.5			
Keystroke force, N	1			
Layout	English or Russian			
Touchpad type	capacitive			
Touchpad active area, mm	59x42			
Touchpad resolution, dpi	100 - 300			
Mounting	panel			
Protection degree	IP54 (front panel)			
Operating temperature, °C	–15 to +55			
Limiting temperature, °C	–60 to +70			
Weight, kg	2.6			
Material	stainless steel			

[1)] Applied protective connectors: 2РМТ14КПН4Ш1В1В for USB interface, РС7ТВ for PS/2 interface.

Dimensional and installation specifications

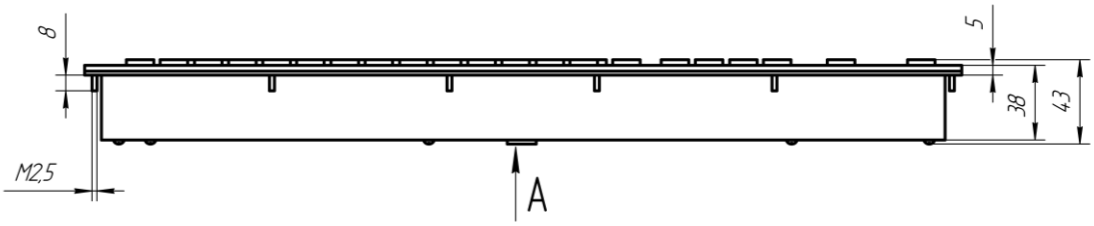

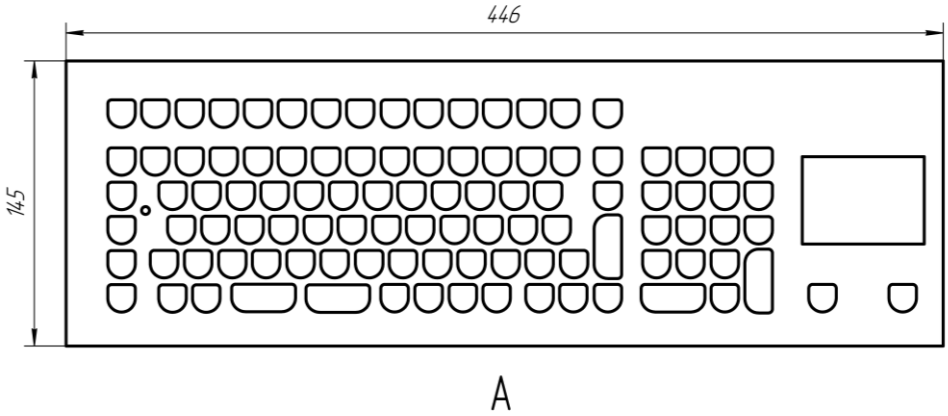

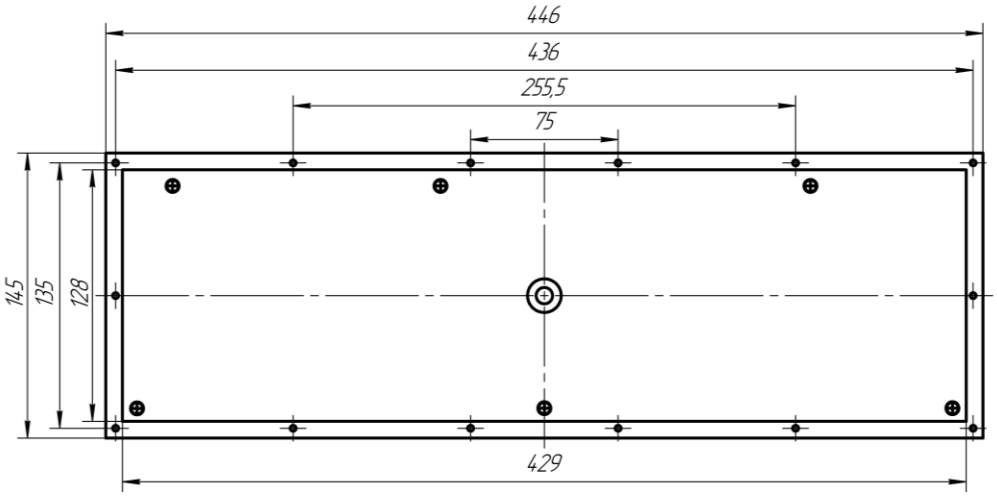

Mounting cutout

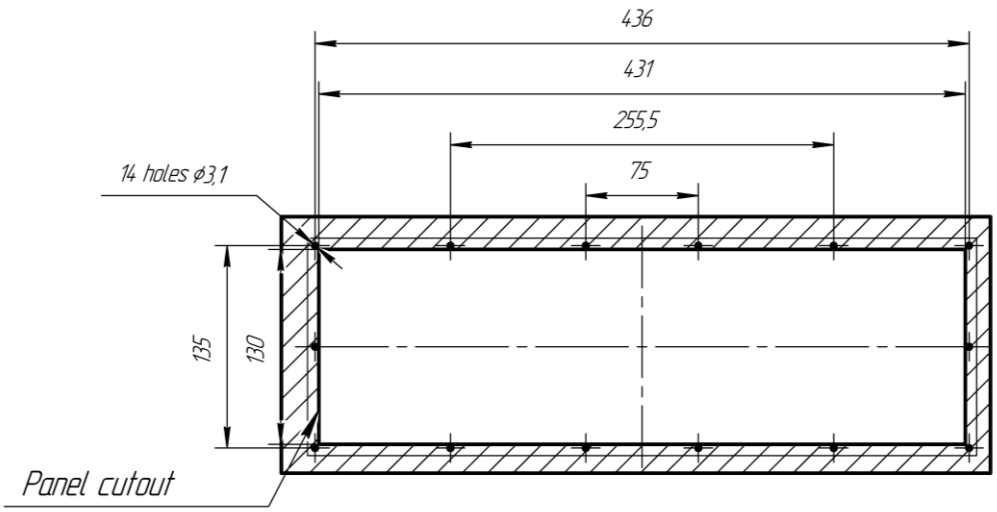

KEYBOARD WITH TOUCHPAD TYPES TCK-2379-01, TCK-2379-03, TCK-2369-02, TCK-2369-04

Certificates

Description

Keyboard with touchpad consists of a set of keys placed in particular order that allows a person to input information, and a touchpad intended to position a cursor on the screen and enter commands.

Certified as a part of Marine panel personal computer types MVPC-xx04, MVPC-xx05, MVPC-xx06, MVPC-xx07.

Technical specifications

Parameter	TCK-2369-02	TCK-2369-04	TCK-2379-01	TCK-2379-03
Type of connectors[1)]	standard	protective	protective	standard
Interface	USB		PS/2	
Number of keyboard keys, pcs.	84			
Number of touchpad keys, pcs.	2			
Key life, mln. clicks	min. 10			
Key travel, mm	1.5			
Keystroke force, N	1			
Layout	English or Russian			
Touchpad type	capacitive			
Touchpad active area, mm	59x42			
Touchpad resolution, dpi	100 - 300			
Mounting	panel			
Protection degree	IP54 (front panel)			
Operating temperature, °C	–15 to +55			
Limiting temperature, °C	–60 to +70			
Weight, kg	2.1			
Material	stainless steel			

[1)] Applied protective connectors: 2РМТ14КПН4Ш1В1В for USB interface, РС7ТВ for PS/2 interface.

Dimensional and installation specifications

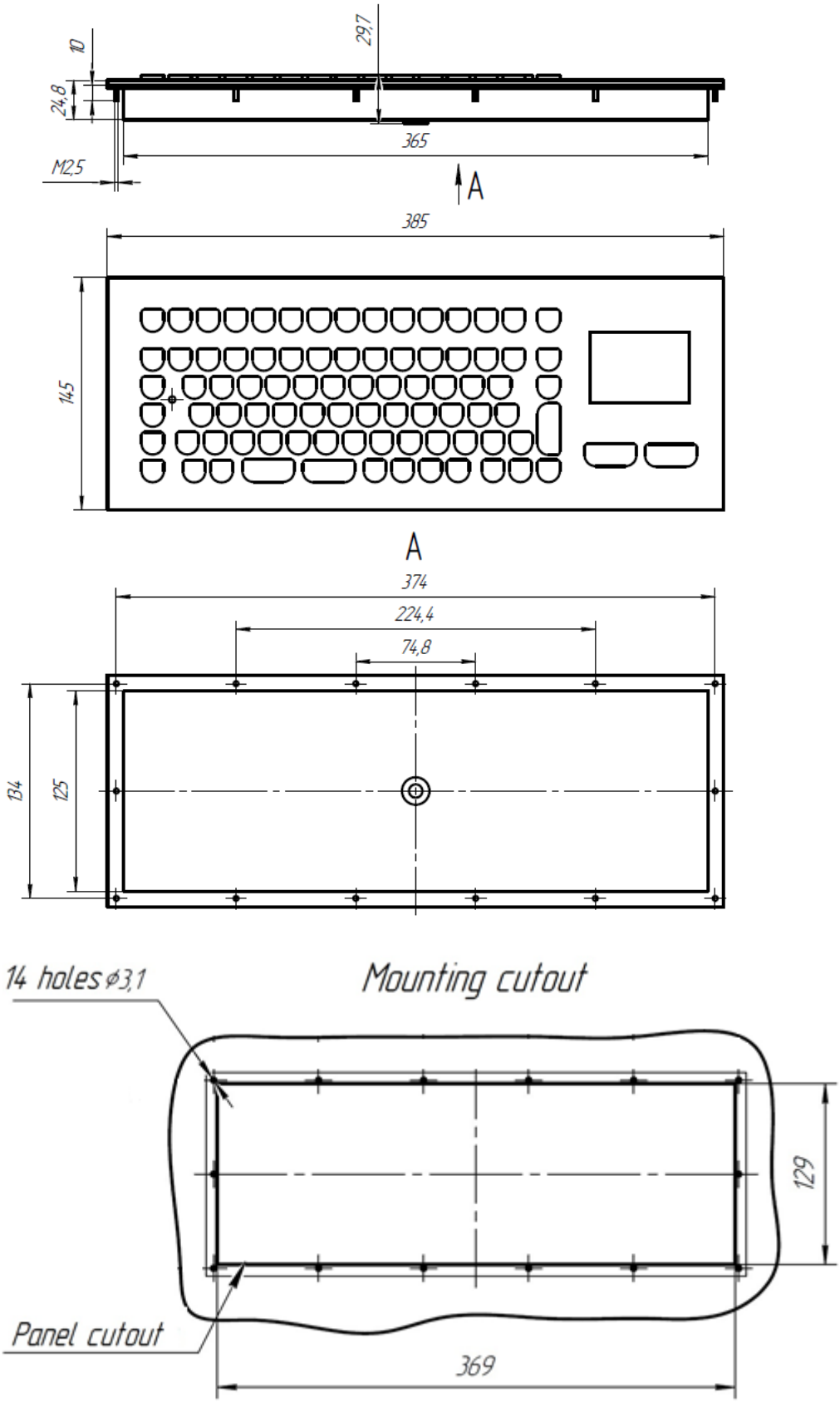

KEYBOARD WITH TOUCHPAD TYPES TCK-1478-01, TCK-1478-03, TCK-1468-02, TCK-1468-04

Certificates

Description

Keyboard with touchpad consists of a set of keys placed in particular order that allows a person to input information, and a touchpad intended to position a cursor on the screen and enter commands.

Certified as a part of Marine panel personal computer types MVPC-xx04, MVPC-xx05, MVPC-xx06, MVPC-xx07.

Technical specifications

Parameter	TCK-1468-02	TCK-1468-04	TCK-1478-01	TCK-1478-03
Type of connectors[1)]	standard	protective	protective	standard
Interface	USB		PS/2	
Number of keyboard keys, pcs.	105			
Number of touchpad keys, pcs.	2			
Key life, mln. clicks	min. 3			
Key travel, mm	0.3			
Keystroke force, N	2.6			
Layout	English or Russian			
Touchpad type	capacitive			
Touchpad active area, mm	59x42			
Touchpad resolution, dpi	100 - 300			
Mounting	panel rack (4U)[2)]			
Protection degree	IP54 (front panel)			
Operating temperature, °C	–15 to +55			
Limiting temperature, °C	–60 to +70			
Weight, kg	1.2			
Material	aluminum			

[1)] Applied protective connectors: 2РМТ14КПН4Ш1В1В for USB interface, РС7ТВ for PS/2 interface.
[2)] Rack mounting 19" 4U height.

Dimensional and installation specifications

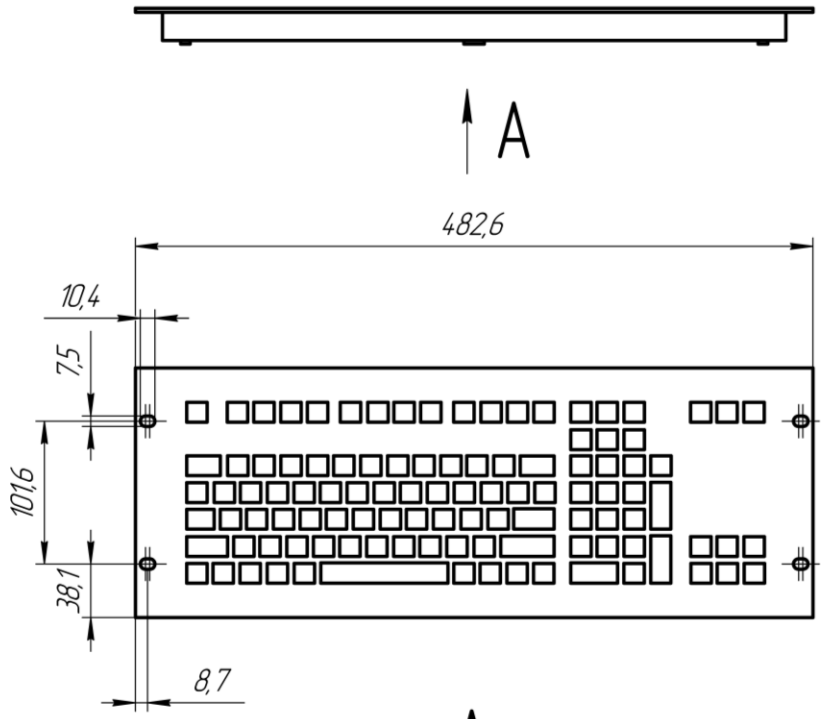

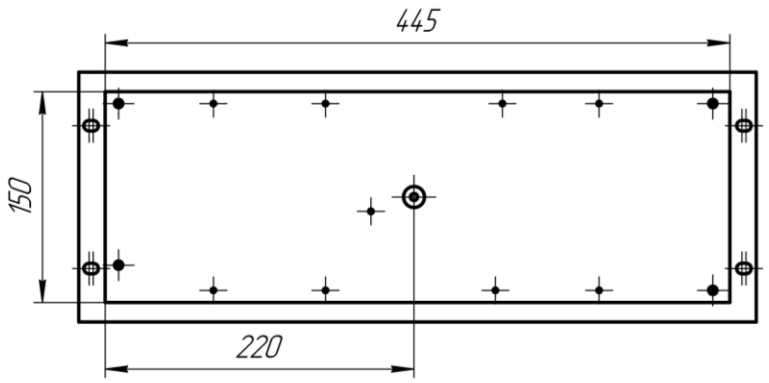

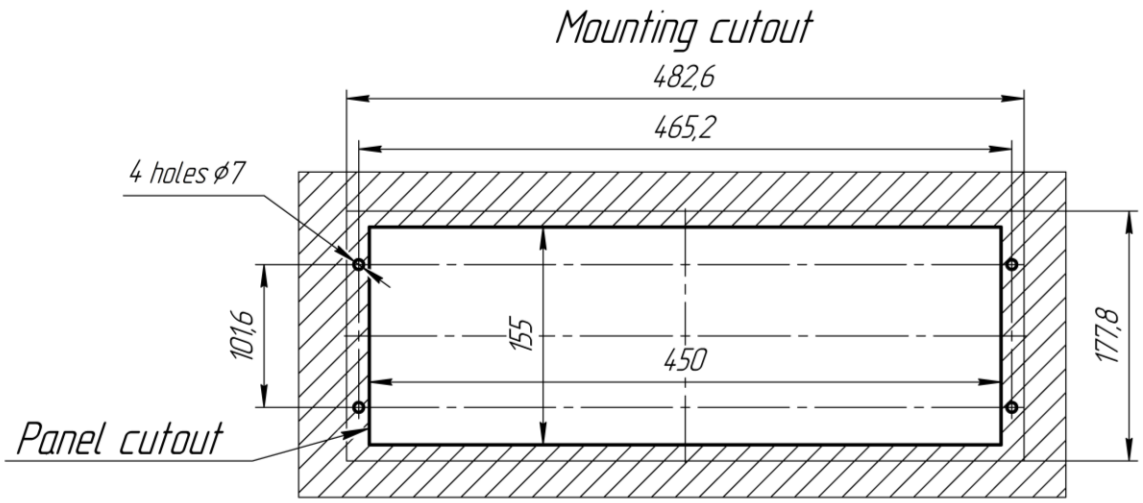

KEYBOARD WITH TOUCHPAD TYPES TCK-1578-01, TCK-1578-03, TCK-1568-02, TCK-1568-04

Certificates

Description

Keyboard with touchpad consists of a set of keys placed in particular order that allows a person to input information, and a touchpad intended to position a cursor on the screen and enter commands.

Certified as a part of Marine panel personal computer types MVPC-xx04, MVPC-xx05, MVPC-xx06, MVPC-xx07.

Technical specifications

Parameter	TCK-1568-02	TCK-1568-04	TCK-1578-01	TCK-1578-03
Type of connectors[1)]	standard	protective	protective	standard
Interface	USB		PS/2	
Number of keyboard keys, pcs.	105			
Number of touchpad keys, pcs.	2			
Key life, mln. clicks	min. 3			
Key travel, mm	0.3			
Keystroke force, N	2.6			
Layout	English or Russian			
Touchpad type	capacitive			
Touchpad active area, mm	59x42			
Touchpad resolution, dpi	100 - 300			
Mounting	desktop			
Protection degree	IP54			
Operating temperature, °C	–15 to +55			
Limiting temperature, °C	–60 to +70			
Weight, kg	1.3			
Material	ABS plastic			

[1)] Applied protective connectors: 2РМТ14КПН4Ш1В1В for USB interface, РС7ТВ for PS/2 interface.

Dimensional and installation specifications

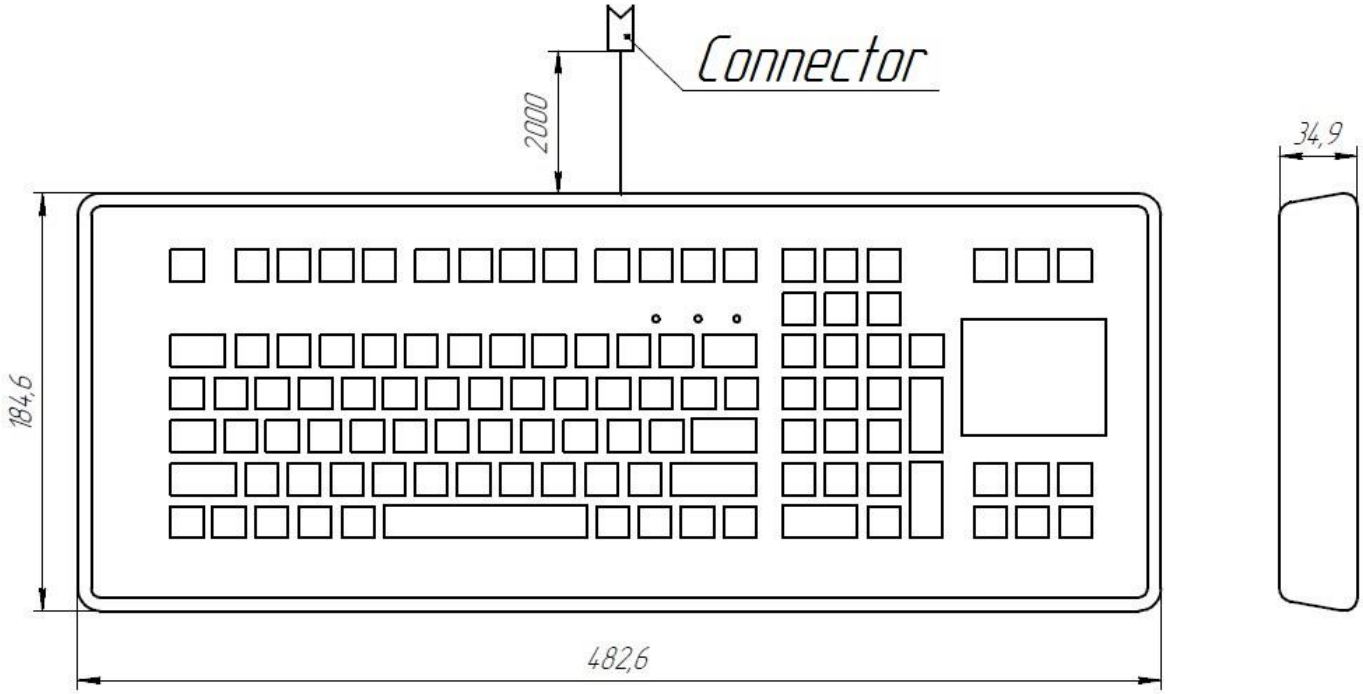

KEYBOARD WITH TOUCHPAD TYPES TCK-1579-01, TCK-1579-03, TCK-1569-02, TCK-1569-04

Certificates

Description

Keyboard with touchpad consists of a set of keys placed in particular order that allows a person to input information, and a touchpad intended to position a cursor on the screen and enter commands.

Certified as a part of Marine panel personal computer types MVPC-xx04, MVPC-xx05, MVPC-xx06, MVPC-xx07.

Technical specifications

Parameter	TCK-1569-02	TCK-1569-04	TCK-1579-01	TCK-1579-03
Type of connectors[1)]	standard	protective	protective	standard
Interface	USB		PS/2	
Number of keyboard keys, pcs.	88			
Number of touchpad keys, pcs.	2			
Key life, mln. clicks	min. 3			
Key travel, mm	0.3			
Keystroke force, N	2.6			
Layout	English and Russian			
Touchpad type	capacitive			
Touchpad active area, mm	59x42			
Touchpad resolution, dpi	100 - 300			
Mounting	desktop			
Protection degree	IP54			
Operating temperature, °C	–15 to +55			
Limiting temperature, °C	–60 to +70			
Weight, kg	1.0			
Material	ABS plastic			

[1)] Applied protective connectors: 2РМТ14КПН4Ш1В1В for USB interface, РС7ТВ for PS/2 interface.

Dimensional and installation specifications

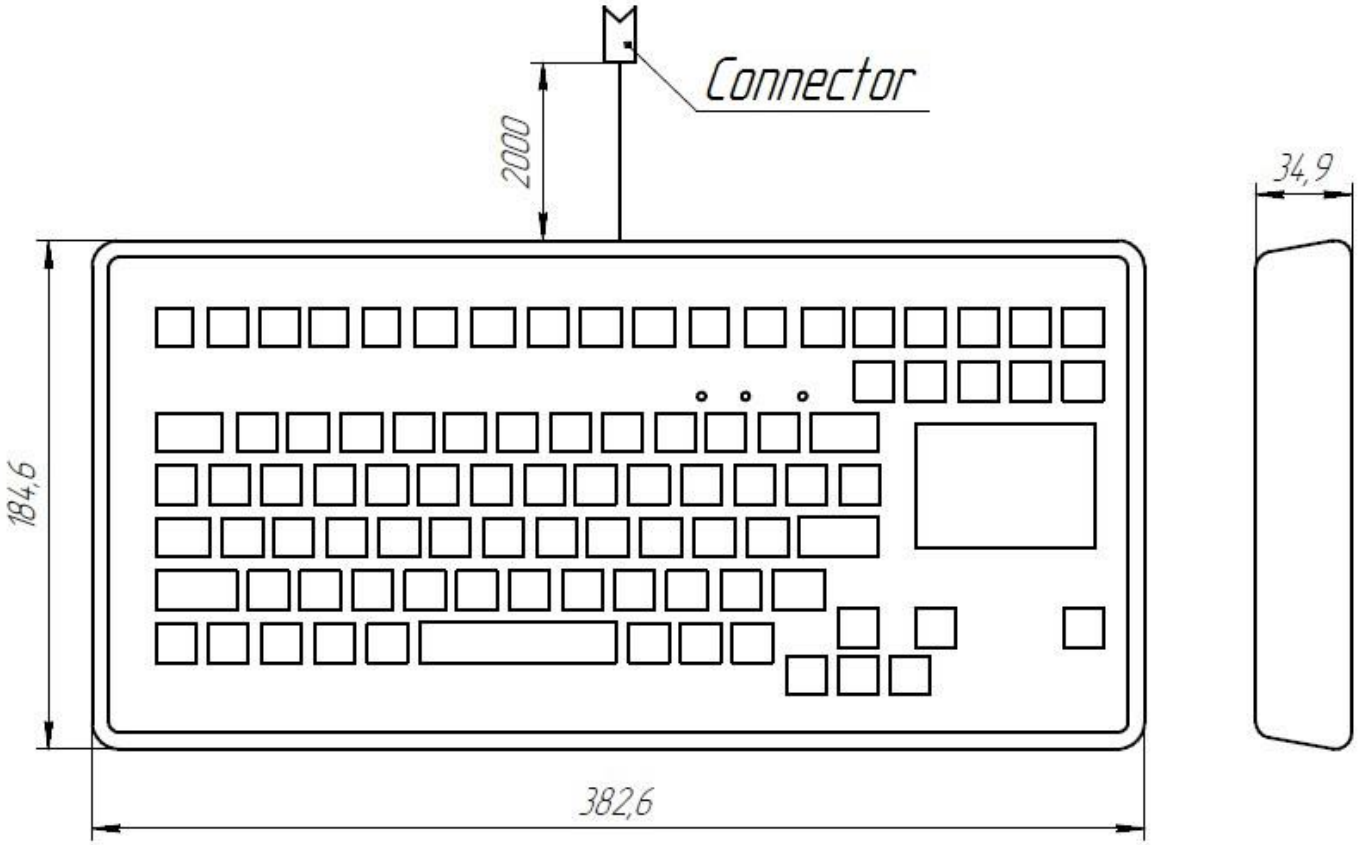

KEYBOARD TYPES К-1378-01, К-1378-03, К-1368-02, К-1368-04

Certificates

Description

Keyboard without a manipulator is a set of keys placed in particular order that allows a person to input information.

Certified as a part of Marine panel personal computer types MVPC-xx04, MVPC-xx05, MVPC-xx06, MVPC-xx07.

Technical specifications

Parameter	К-1368-02	К-1368-04	К-1378-01	К-1378-03
Type of connectors[1)]	standard	protective	protective	standard
Interface	USB		PS/2	
Number of keyboard keys, pcs.	104			
Key life, mln. clicks	min. 3			
Key travel, mm	0.3			
Keystroke force, N	2.6			
Layout	English or Russian			
Mounting	panel			
Protection degree	IP54 (front panel)			
Operating temperature, °C	–15 to +55			
Limiting temperature, °C	–60 to +70			
Weight, kg	1.0			
Material	aluminum			

[1)] Applied protective connectors: 2РМТ14КПН4Ш1В1В для интерфейса USB, РС7ТВ для интерфейса PS/2.

Dimensional and installation specifications

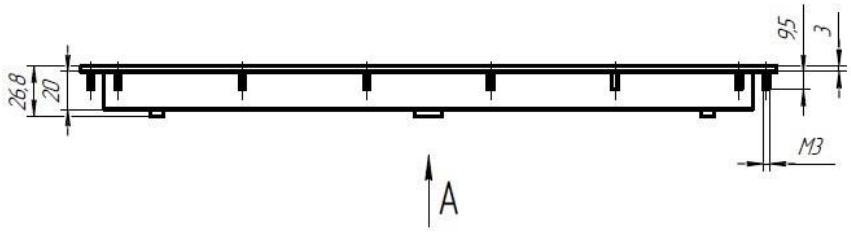

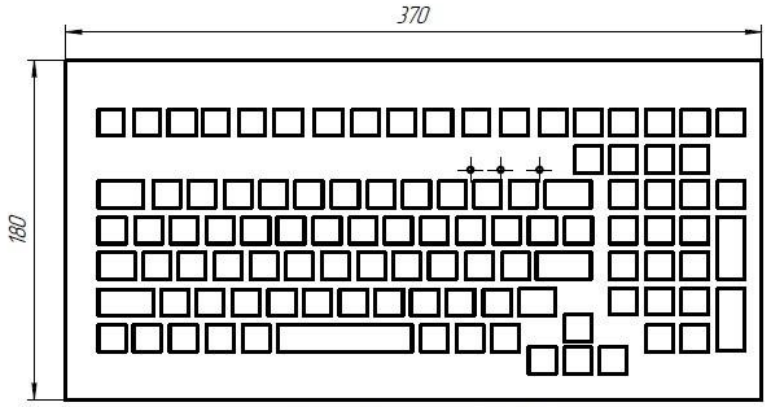

Mounting cutout

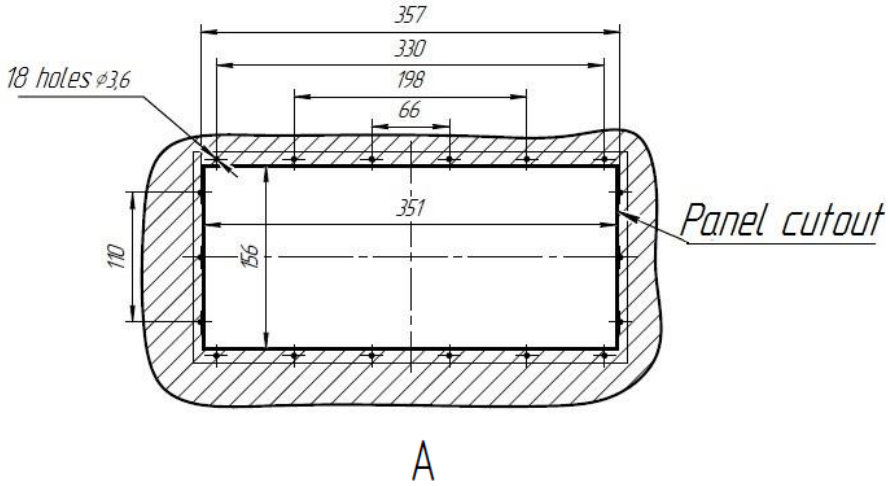

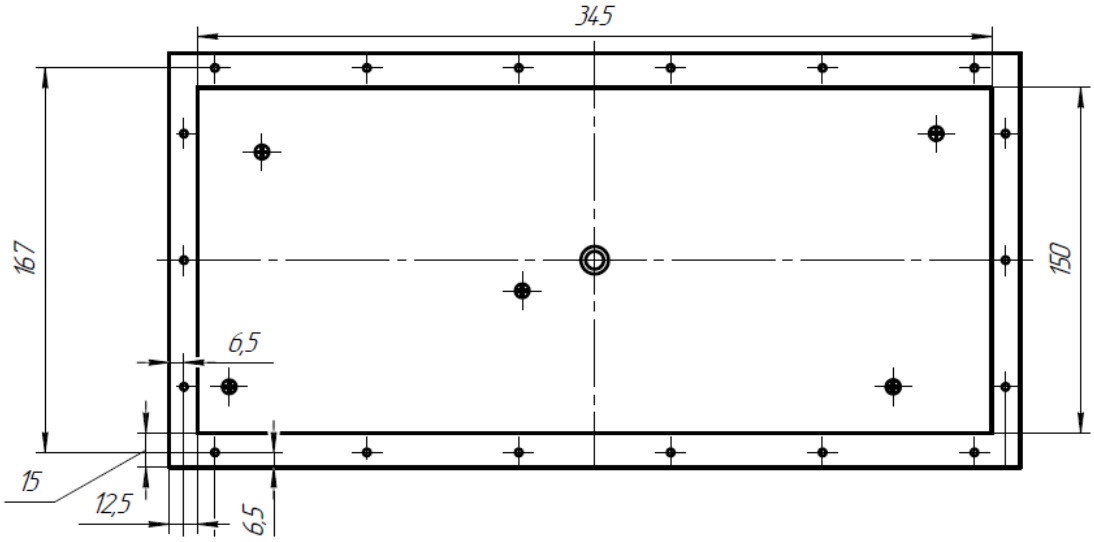

KEYBOARD TYPES К-1578-01, К-1578-03, К-1568-02, К-1568-04

Certificates

Description

Keyboard without a manipulator is a set of keys placed in particular order that allows a person to input information.

Certified as a part of Marine panel personal computer types MVPC-xx04, MVPC-xx05, MVPC-xx06, MVPC-xx07.

Technical specifications

Parameter	К-1568-02	К-1568-04	К-1578-01	К-1578-03
Type of connectors[1)]	standard	protective	protective	standard
Interface	USB		PS/2	
Number of keyboard keys, pcs.	104			
Key life, mln. clicks	min. 3			
Key travel, mm	0.3			
Keystroke force, N	2.6			
Layout	English or Russian			
Mounting	desktop			
Protection degree	IP54			
Operating temperature, °C	–15 to +55			
Limiting temperature, °C	–60 to +70			
Weight, kg	1.1			
Material	ABS plastic			
[1)] Applied protective connectors: 2РМТ14КПН4Ш1В1В for USB interface, РС7ТВ for PS/2 interface.				

Dimensional and installation specifications

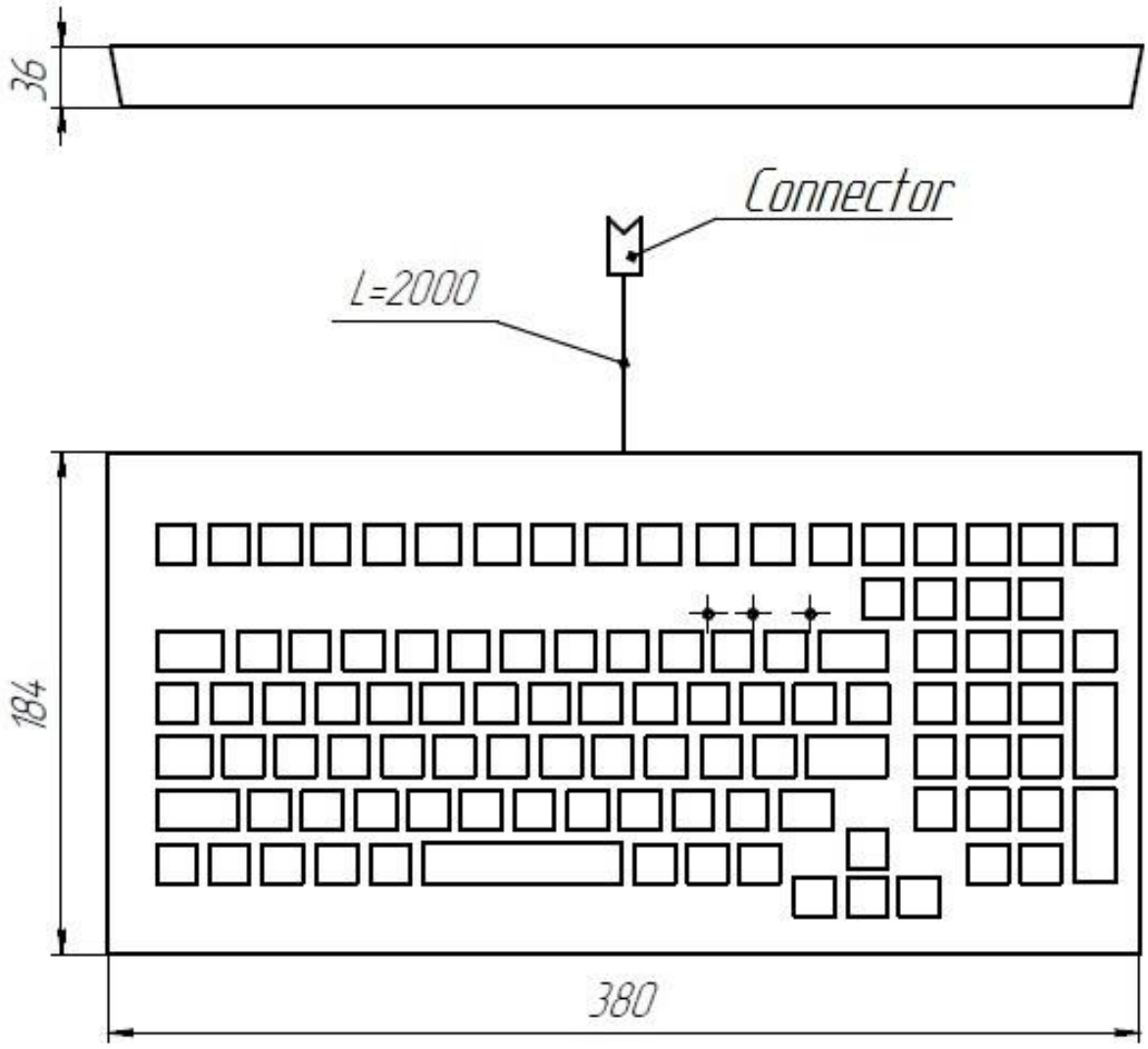

KEYBOARD TYPES К-1478-01, К-1478-03, К-1468-02, К-1468-04

Certificates

Description

Keyboard without a manipulator is a set of keys placed in particular order that allows a person to input information.

Certified as a part of Marine panel personal computer types MVPC-xx04, MVPC-xx05, MVPC-xx06, MVPC-xx07.

Technical specifications

Parameter	К-1468-02	К-1468-04	К-1478-01	К-1478-03
Type of connectors[1)]	standard	protective	protective	standard
Interface	USB		PS/2	
Number of keyboard keys, pcs.	104			
Key life, mln. clicks	min. 3			
Key travel, mm	0.3			
Keystroke force, N	2.6			
Layout	English or Russian			
Mounting	rack 19" (pull-out)			
Protection degree	IP54			
Operating temperature, °C	–15 to +55			
Limiting temperature, °C	–60 to +70			
Weight, kg	5.0			
Material	aluminum (front panel) steel (housing)			

[1)] Applied protective connectors: 2РМТ14КПН4Ш1В1В for USB interface, РС7ТВ for PS/2 interface.

Dimensional and installation specifications

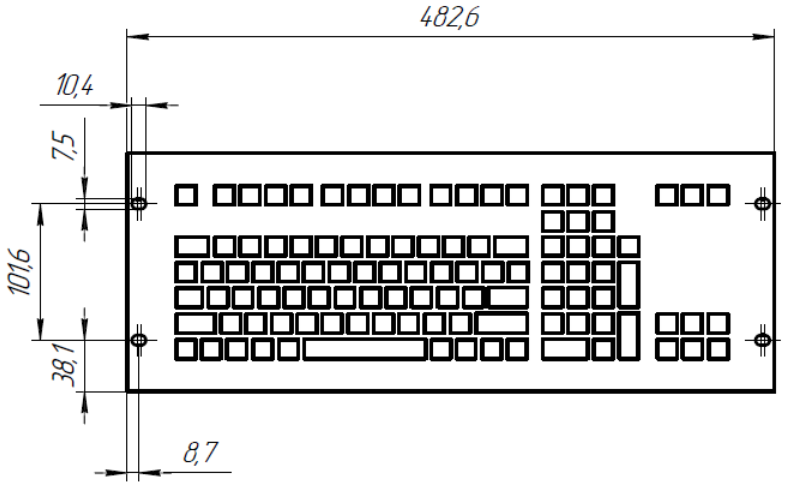

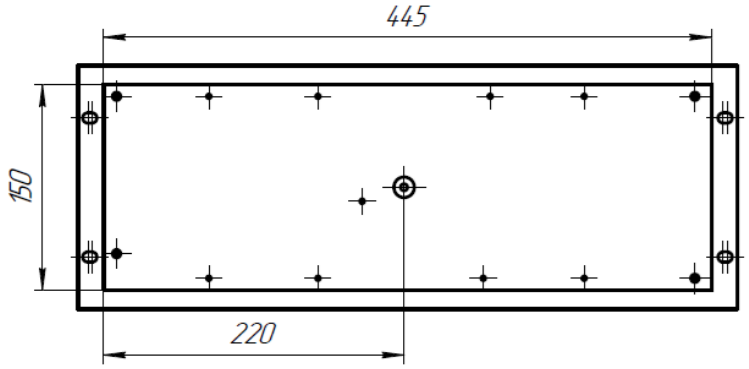

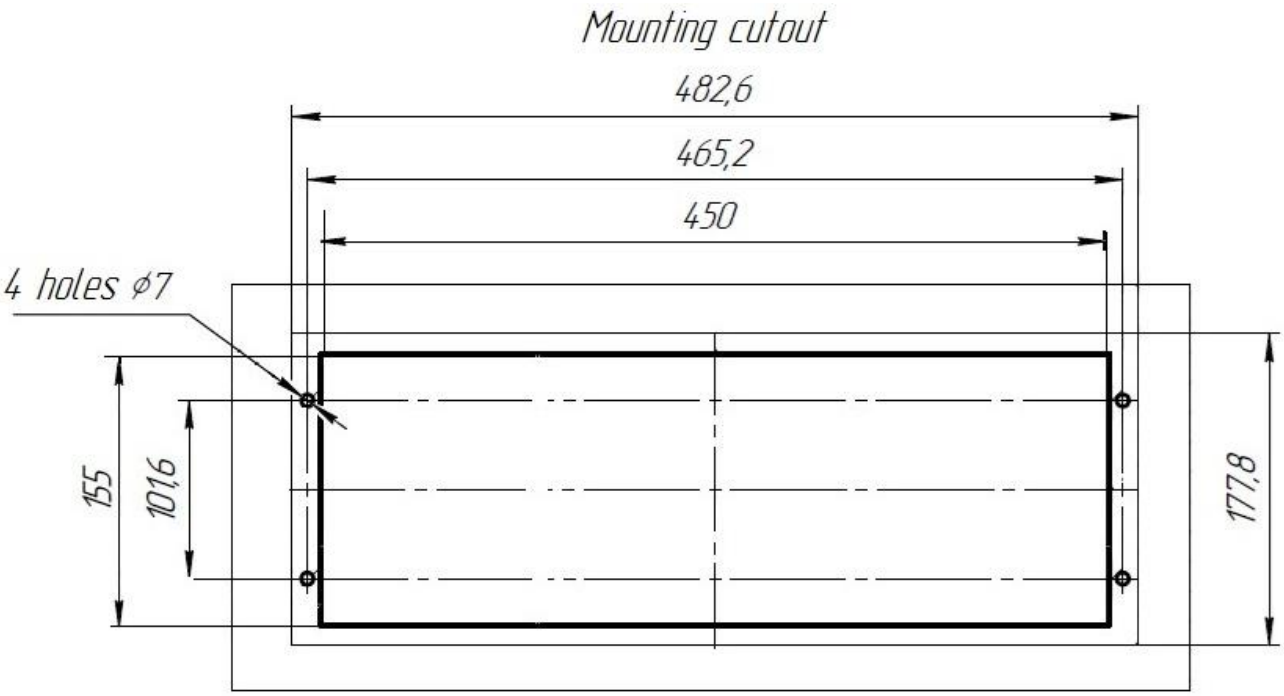

KEYBOARD TYPES К-1379-01, К-1379-03, К-1369-02, К-1369-04

Certificates

Description

Keyboard without a manipulator is a set of keys placed in particular order that allows a person to input information.

Certified as a part of Marine panel personal computer MVPC-xx04, MVPC-xx05, MVPC-xx06, MVPC-xx07 types.

Technical specifications

Parameter	К-1369-02	К-1369-04	К-1379-01	К-1379-03
Type of connectors[1)]	standard	protective	protective	standard
Interface	USB		PS/2	
Number of keyboard keys, pcs.	85			
Key life, mln. clicks	min. 1			
Key travel, mm	0.6			
Keystroke force, N	3			
Layout	English or Russian			
Mounting	panel			
Protection degree	IP54 (front panel)			
Operating temperature, °C	–15 to +55			
Limiting temperature, °C	–60 to +70			
Weight, kg	0.35			
Material	glass fiber laminate FR4 (front panel) aluminum (housing)			

[1)] Applied protective connectors: 2РМТ14КПН4Ш1В1В for USB interface, РС7ТВ for PS/2 interface.

Dimensional and installation specifications

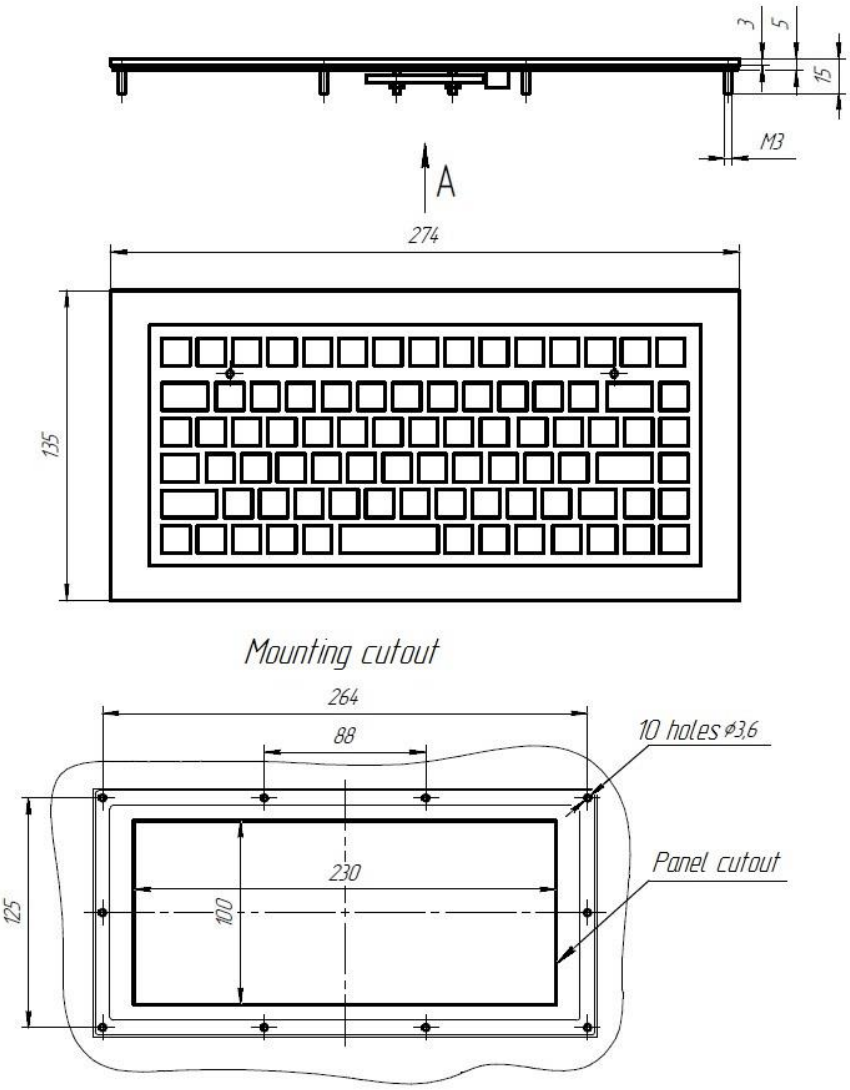

KEYBOARD TYPES К-1579-01, К-1579-03, К-1569-02, К-1569-04

Certificates

Description

Keyboard without a manipulator is a set of keys placed in particular order that allows a person to input information.

Certified as a part of Marine panel personal computer types MVPC-xx04, MVPC-xx05, MVPC-xx06, MVPC-xx07.

Technical specifications

Parameter	К-1569-02	К-1569-04	К-1579-01	К-1579-03
Type of connectors[1)]	standard	protective	protective	standard
Interface	USB		PS/2	
Number of keyboard keys, pcs.	85			
Key life, mln. clicks	min. 1			
Key travel, mm	0.6			
Keystroke force, N	3			
Layout	English or Russian			
Mounting	desktop			
Protection degree	IP54			
Operating temperature, °C	–15 to +55			
Limiting temperature, °C	–60 to +70			
Weight, kg	0.7			
Material	ABS plastic			

[1)] Applied protective connectors: 2РМТ14КПН4Ш1В1В for USB interface, РС7ТВ for PS/2 interface.

Dimensional and installation specifications

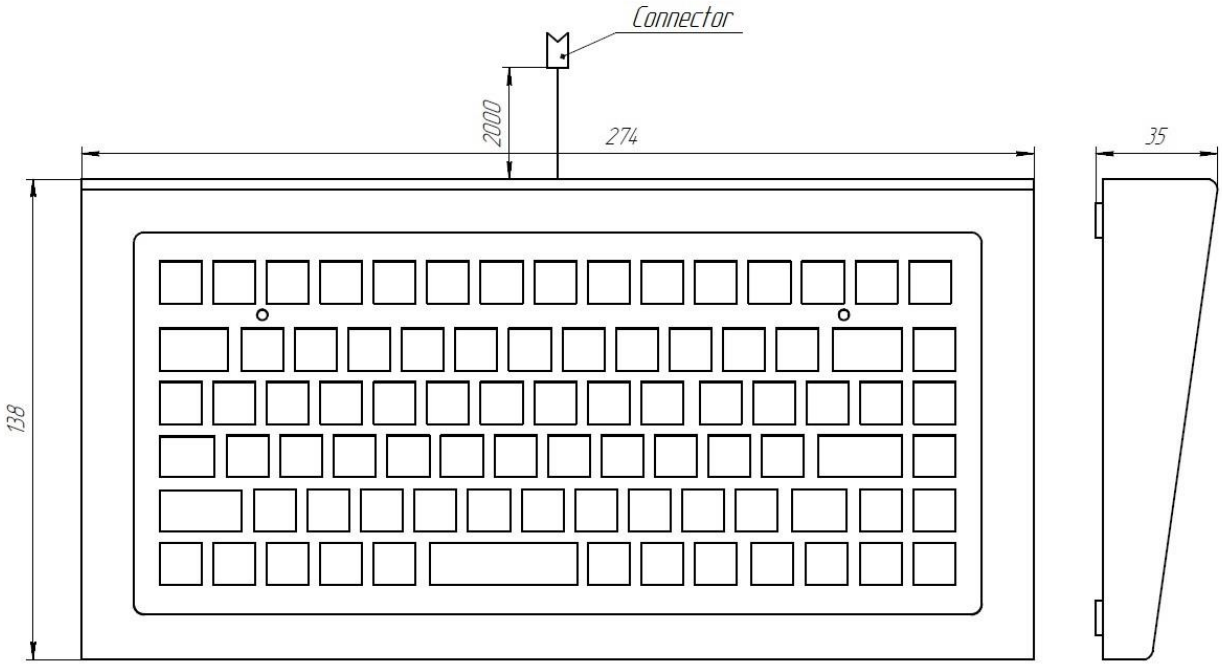

KEYBOARD TYPES К-2379-01, К-2379-03, К-2369-02, К-2369-04

Certificates

Description

Keyboard without a manipulator is a set of keys placed in particular order that allows a person to input information.

Certified as a part of Marine panel personal computer types MVPC-xx04, MVPC-xx05, MVPC-xx06, MVPC-xx07.

Technical specifications

Parameter	К-2369-02	К-2369-04	К-2379-01	К-2379-03
Type of connectors[1)]	standard	protective	protective	standard
Interface	USB		PS/2	
Number of keyboard keys, pcs.	83			
Key life, mln. clicks	min. 1			
Key travel, mm	1.2			
Keystroke force, N	1.2			
Layout	English or Russian			
Mounting	panel			
Protection degree	IP54 (front panel)			
Operating temperature, °C	–15 to +55			
Limiting temperature, °C	–60 to +70			
Weight, kg	0.5			
Material	glass fiber laminate FR4 (front panel) aluminum (housing)			

[1)] Applied protective connectors: 2РМТ14КПН4Ш1В1В for USB interface, РС7ТВ for PS/2 interface.

Dimensional and installation specifications

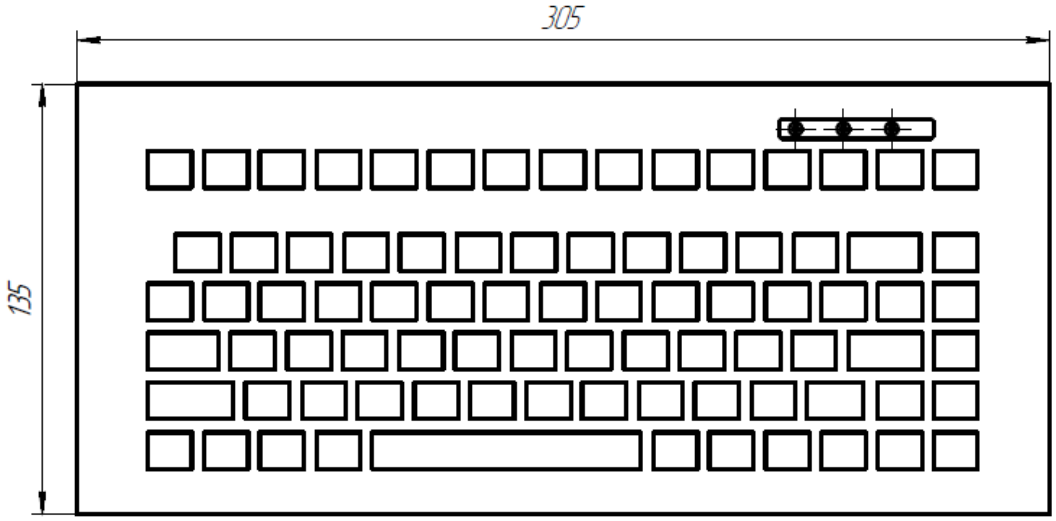

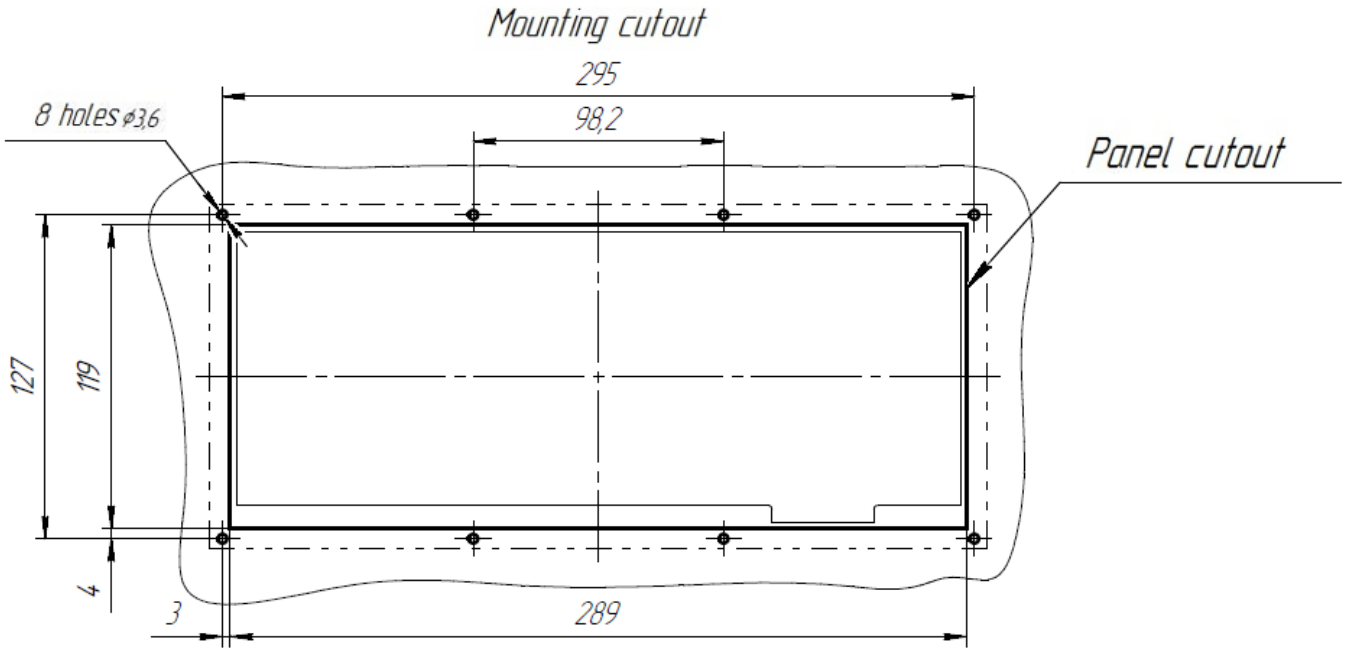

TRACKBALL MANIPULATOR TYPES TBM-2378-01, TBM-2378-03, TBM-2368-02, TBM-2368-04

Certificates

Description

Trackball manipulator is a device intended to position the cursor on the screen by rotation of the ball installed inside the fixed housing.

Certified as a part of Marine panel personal computer types MVPC-xx04, MVPC-xx05, MVPC-xx06, MVPC-xx07.

Technical specifications

Parameter	TBM-2368-02	TBM-2368-04	TBM-2378-01	TBM-2378-03
Type of connectors[1)]	standard	protective	protective	standard
Interface	USB		PS/2	
Number of manipulator keys, pcs.	2			
Key life, mln. clicks	min. 3			
Key travel, mm	0.5			
Keystroke force, N	4			
Type of manipulator	laser			
Ball diameter, mm	38			
Trackball life, mln. rotations	2			
Mounting	panel			
Protection degree	IP54 (front panel)			
Operating temperature, °C	–15 to +55			
Limiting temperature, °C	–60 to +70			
Weight, kg	0.35			
Trackball material	phenol resin			
Front panel material	stainless steel			

[1)] Applied protective connectors: 2РМТ14КПН4Ш1В1В for USB interface, РС7ТВ for PS/2 interface.

Dimensional and installation specifications

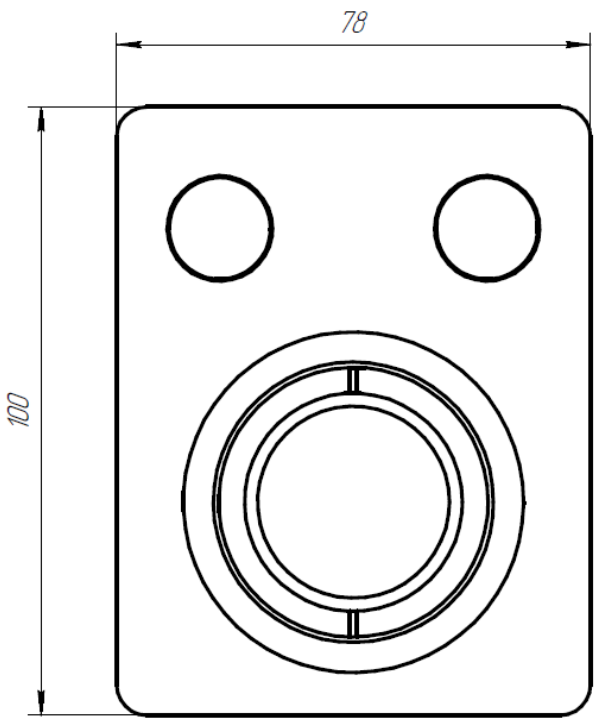

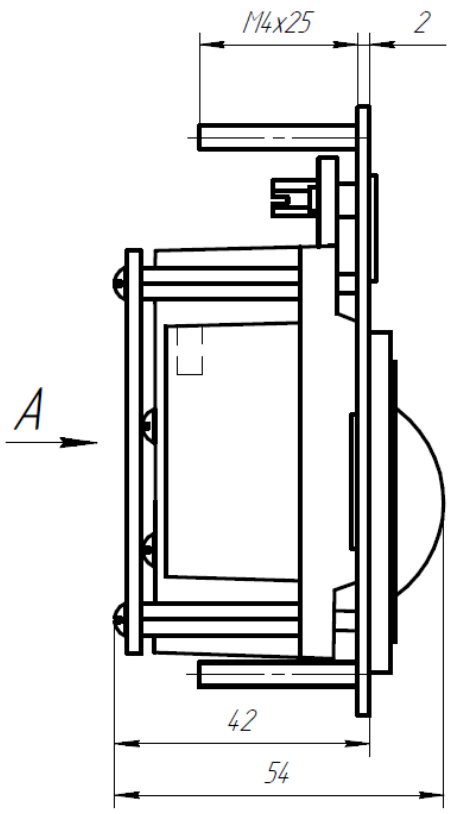

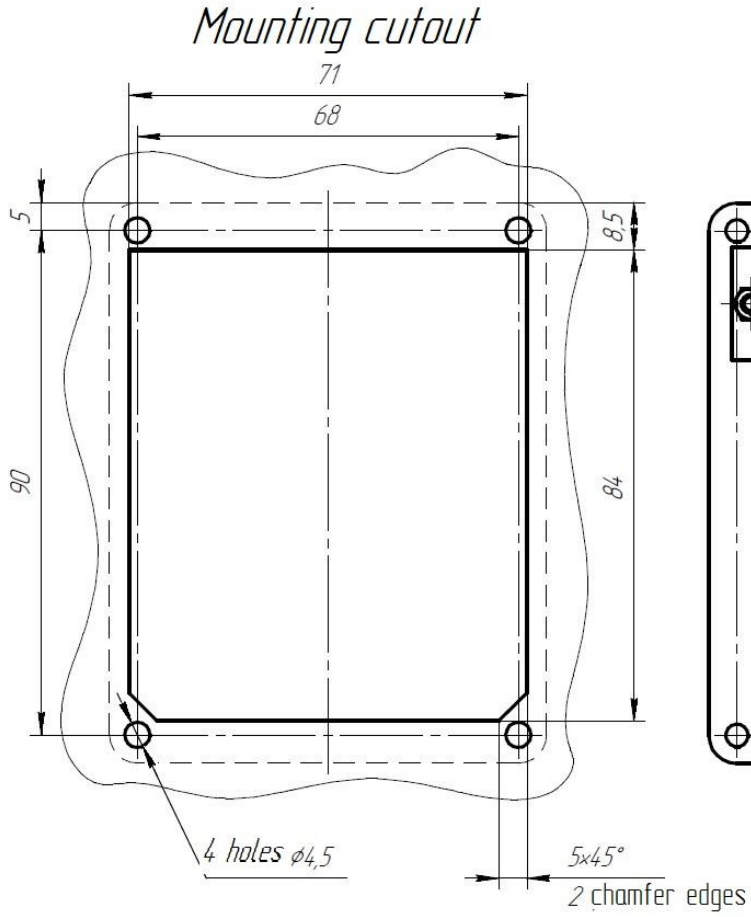

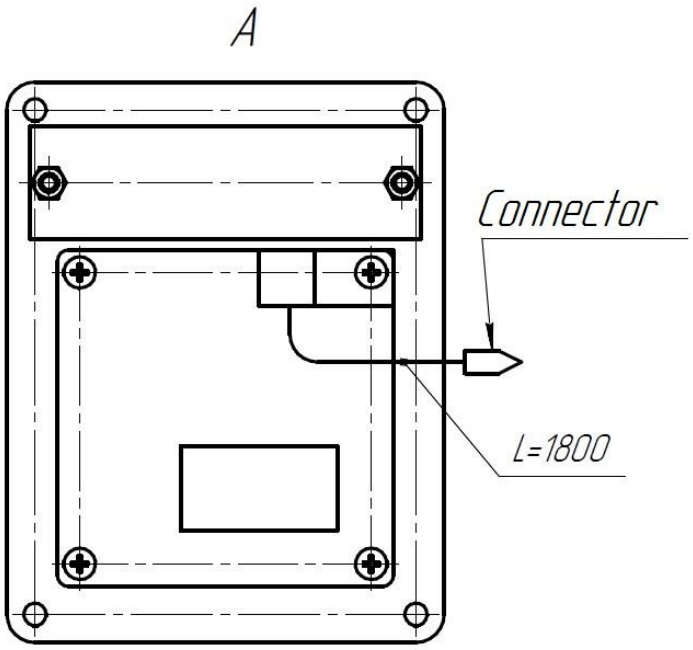

TRACKBALL MANIPULATOR TYPES TBM-2379-01, TBM-2379-03, TBM-2369-02, TBM-2369-04

Certificates

Description

Trackball manipulator is a device intended to position the cursor on the screen by rotation of the ball installed inside the fixed housing.

Certified as a part of Marine panel personal computer types MVPC-xx04, MVPC-xx05, MVPC-xx06, MVPC-xx07.

Technical specifications

Parameter	TBM-2369-02	TBM-2369-04	TBM-2379-01	TBM-2379-03
Type of connectors[1)]	standard	protective	protective	standard
Interface	USB		PS/2	
Number of manipulator keys, pcs.	3			
Key life, mln. clicks	min. 3			
Key travel, mm	0.5			
Keystroke force, N	4			
Type of manipulator	laser			
Ball diameter, mm	50			
Trackball life, mln. rotations	2			
Mounting	panel			
Protection degree	IP54 (front panel)			
Operating temperature, °C	–15 to +55			
Limiting temperature, °C	–60 to +70			
Weight, kg	0.5			
Trackball material	phenol resin			
Front panel material	stainless steel			

[1)] Applied protective connectors: 2РМТ14КПН4Ш1В1В for USB interface, РС7ТВ for PS/2 interface.

Dimensional and installation specifications

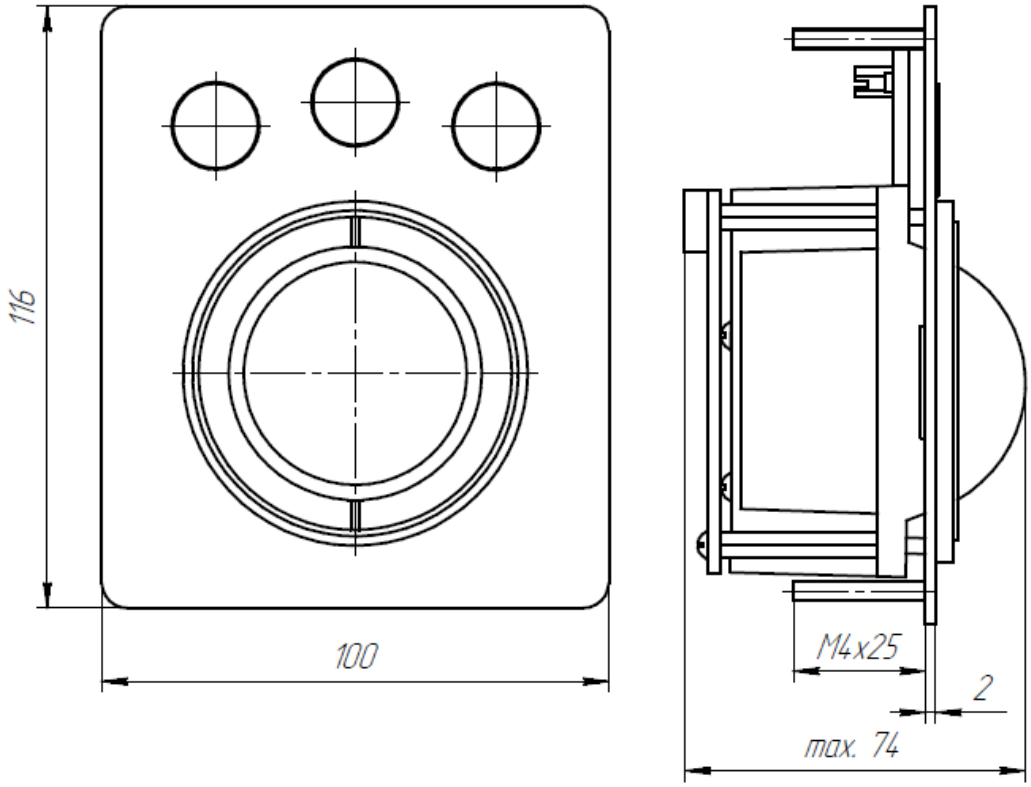

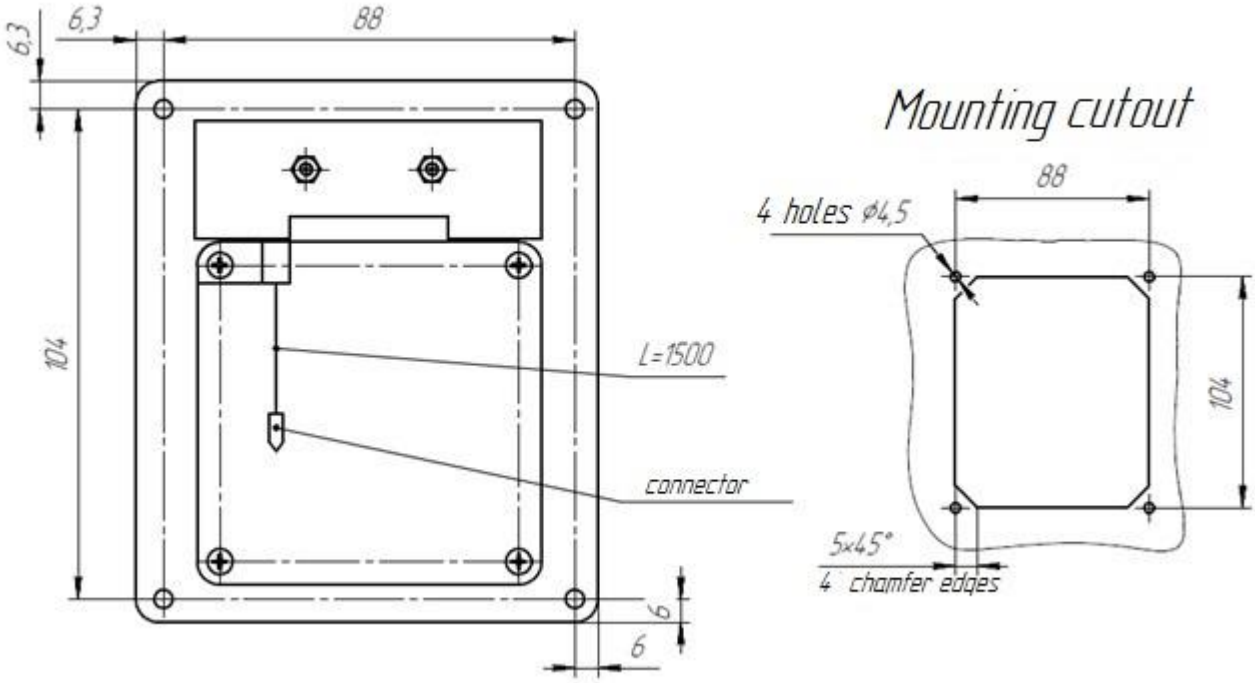

TRACKBALL MANIPULATOR TYPES TBM-1478-01, TBM-1478-03, TBM-1468-02, TBM-1468-04

Certificates

Description

Trackball manipulator is a device intended to position the cursor on the screen by rotation of the ball installed inside the fixed housing.

Certified as a part of Marine panel personal computer types MVPC-xx04, MVPC-xx05, MVPC-xx06, MVPC-xx07.

Technical specifications

Parameter	TBM-1468-02	TBM-1468-04	TBM-1478-01	TBM-1478-03
Type of connectors[1)]	standard	protective	protective	standard
Interface	USB		PS/2	
Number of manipulator keys, pcs.	3			
Key life, mln. clicks	min. 1			
Key travel, mm	0.3			
Keystroke force, N	1.5			
Type of manipulator	infrared			
Ball diameter, mm	50			
Mounting	panel			
Protection degree	IP54 (front panel)			
Operating temperature, °C	–15 to +55			
Limiting temperature, °C	–60 to +70			
Weight, kg	0.5			
Housing material	epoxy plastic, ABS plastic			

[1)] Applied protective connectors: 2РМТ14КПН4Ш1В1В for USB interface, РС7ТВ for PS/2 interface.

Dimensional and installation specifications

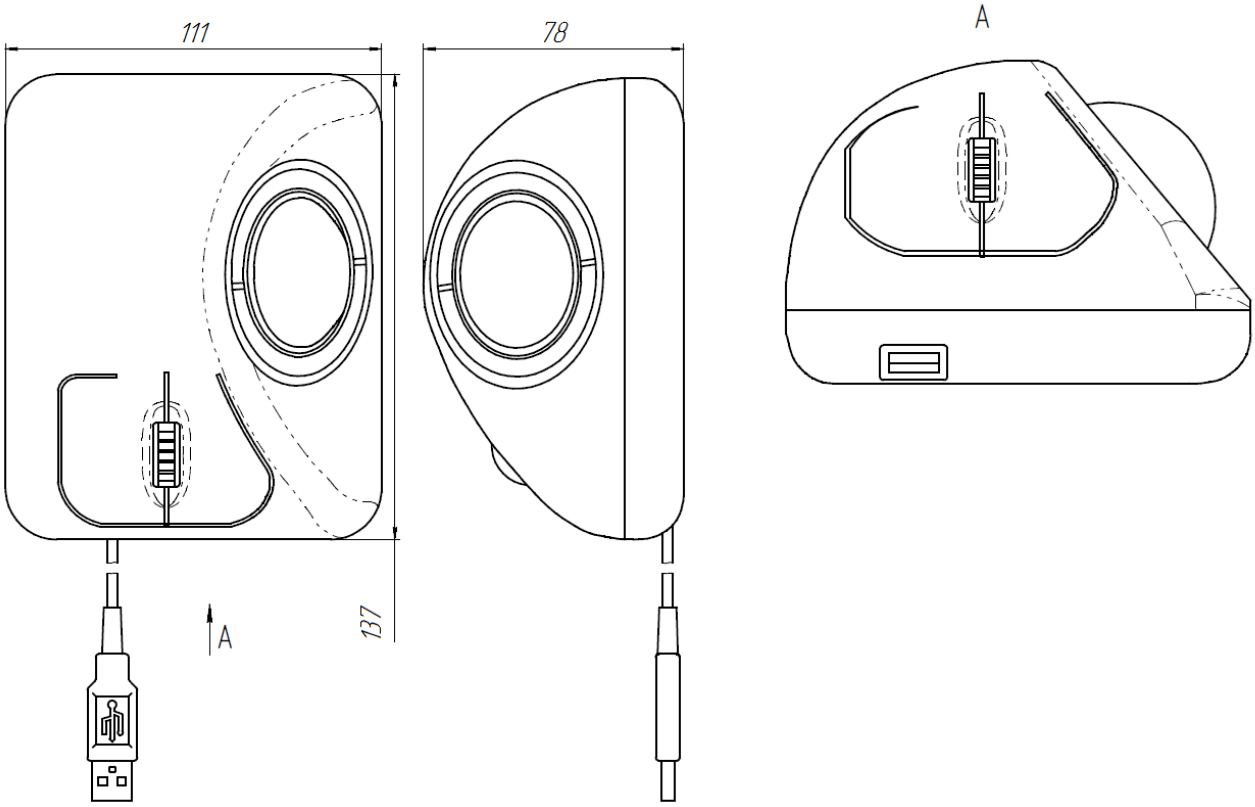

TRACKBALL MANIPULATOR TYPE TBM-23678

Certificates

Description

Trackball manipulator is a device intended to position the cursor on the screen by rotation of the ball installed inside the fixed housing.

Certified as a part of Marine panel personal computer types MVPC-xx04, MVPC-xx05, MVPC-xx06, MVPC-xx07.

Technical specifications

Parameter	TBM-23678-02
Type of connectors	standard
Interface	USB PS/2
Number of manipulator keys, pcs.	3
Key life, mln. clicks	min. 1
Key travel, mm	1.3
Keystroke force, N	4
Manipulator type	mechanical
Ball diameter, mm	50
Trackball life, mln. rotations	2
Mounting	panel
Protection degree	IP54 (front panel)
Operating temperature, °C	–15 to +55
Limiting temperature, °C	–60 to +70
Weight, kg	0.6
Trackball material	phenol resin
Front panel material	stainless steel

Dimensional and installation specifications

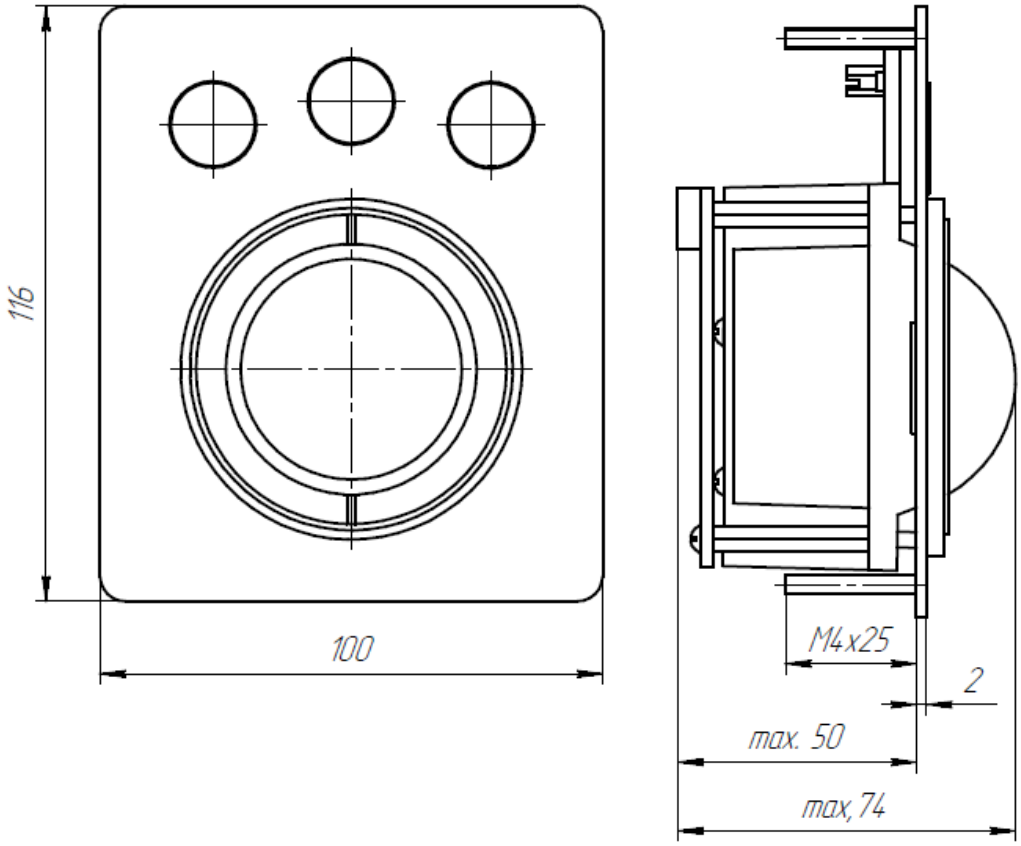

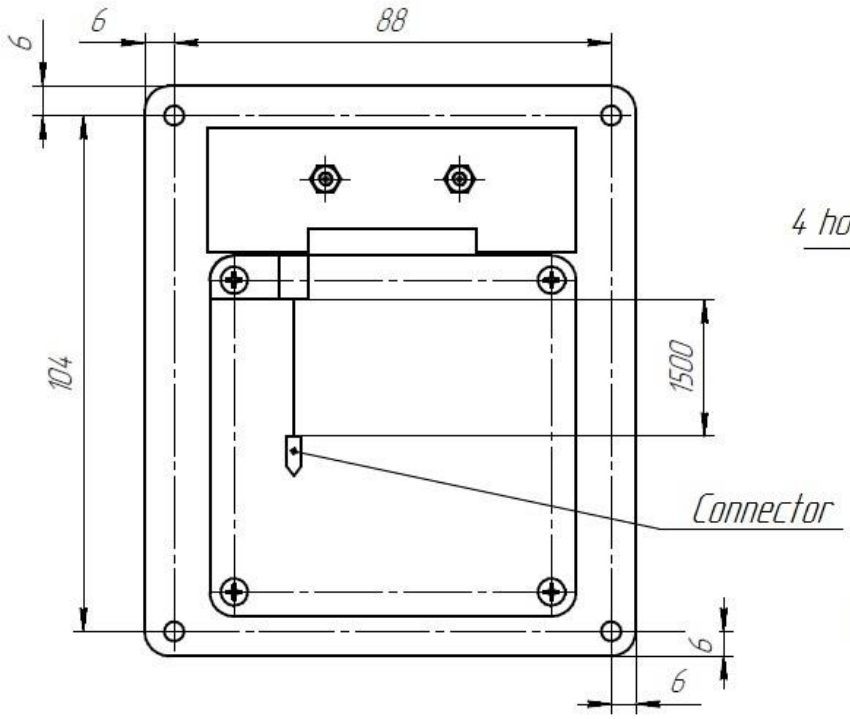

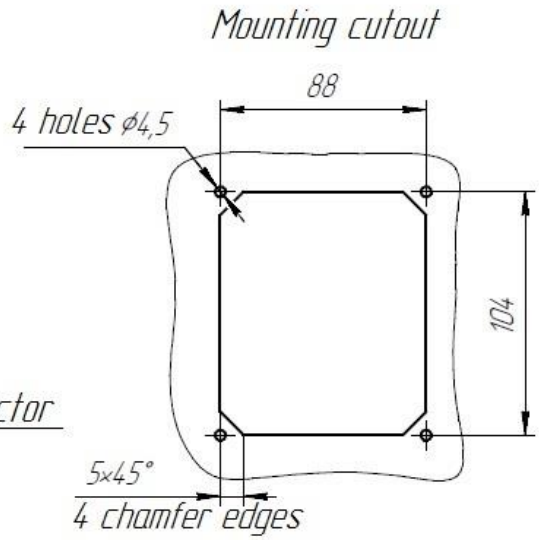

TOUCHPAD MANIPULATOR TYPES TCM-2379-01, TCM-2379-03, TCM-2369-02, TCM-2369-04

Certificates

Description

Touchpad manipulator is a pointing input device intended to control the cursor and input commands.

Certified as a part of Marine panel personal computer types MVPC-xx04, MVPC-xx05, MVPC-xx06, MVPC-xx07.

Technical specifications

Parameter	TCM-2369-02	TCM-2369-04	TCM-2379-01	TCM-2379-03
Type of connectors[1)]	standard	protective	protective	standard
Interface	USB		PS/2	
Number of manipulator keys, pcs.	2			
Key life, mln. clicks	min. 3			
Key travel, mm	0.5			
Keystroke force, N	4			
Type of manipulator	capacitive			
Active area, mm	55x39			
Resolution, dpi	100 - 300			
Mounting	panel			
Protection degree	IP54 (front panel)			
Operating temperature, °C	–15 to +55			
Limiting temperature, °C	–60 to +70			
Weight, kg	0.4			
Front panel material	stainless steel			

[1)] Applied protective connectors: 2РМТ14КПН4Ш1В1В for USB interface, РС7ТВ for PS/2 interface.

Dimensional and installation specifications

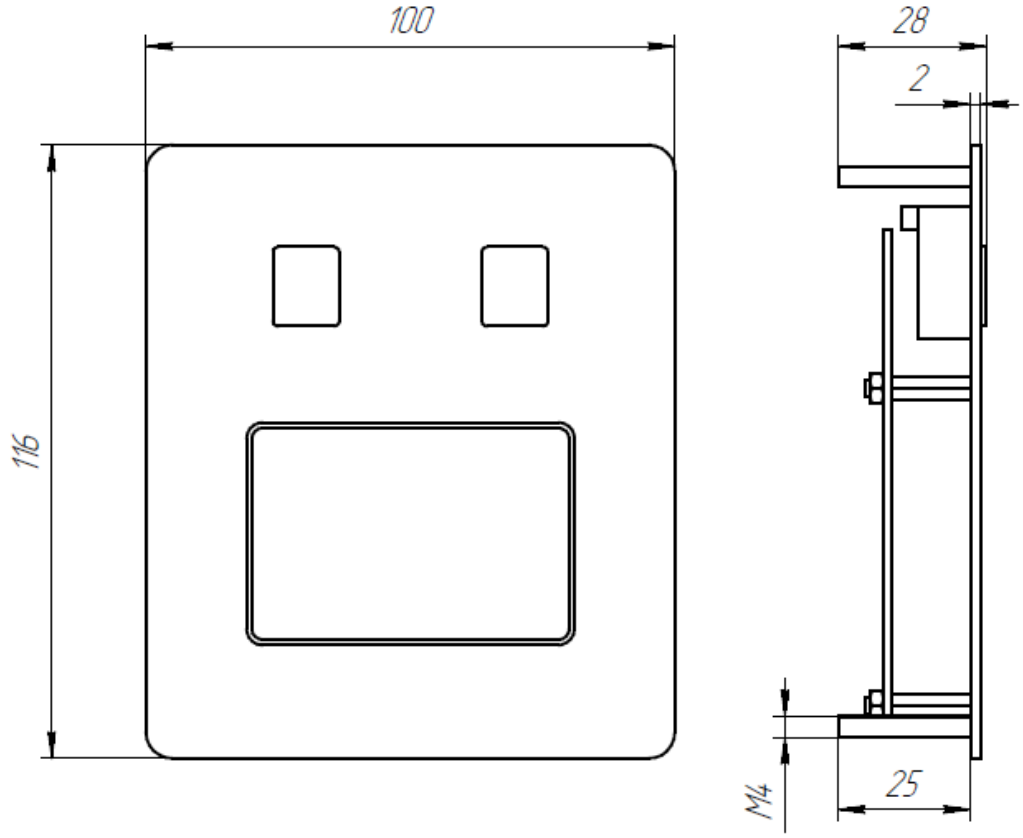

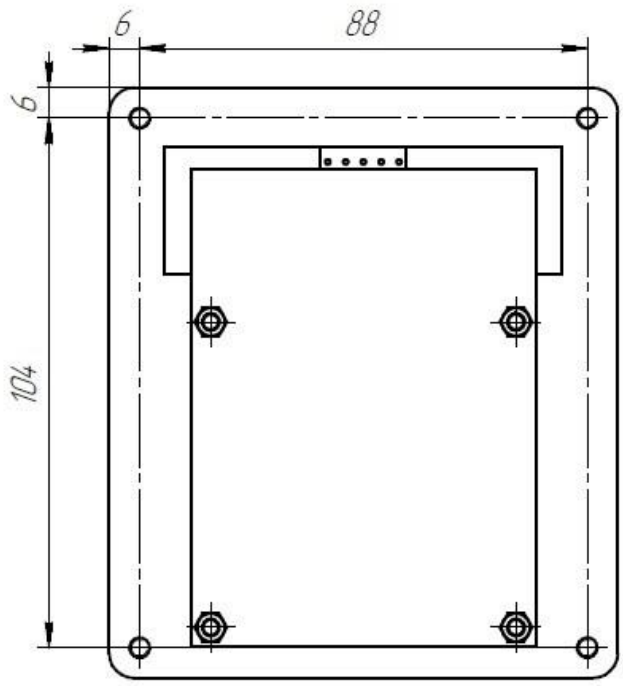

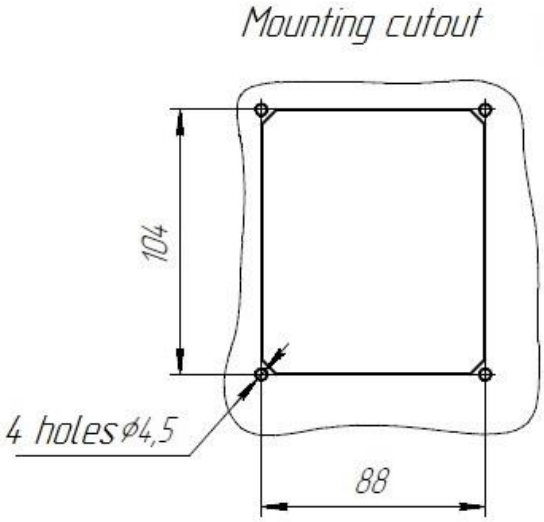

COMPUTER MOUSE TYPES M-1568-02, M-1568-04

Certificates

Description

Computer mouse is a pointing device intended to control the cursor and input commends. To control cursor, move the mouse on the flat surface; to input the commands, press the mouse keys, scroll or press the mouse wheel.

Certified as a part of Marine panel personal computer types MVPC-xx04, MVPC-xx05, MVPC-xx06, MVPC-xx07.

Technical specifications

Parameter	M-1568-02	M-1568-04
Type of connectors	standard	standards
Interface	USB	
Number of mouse keys, pcs.	2	
Key life, mln. clicks	min. 10	
Type of mouse	laser	
Resolution, dpi	1000	
Mounting	desktop	
Protection degree	IP54	
Operating temperature, °C	–15 to +55	
Limiting temperature, °C	–60 to +70	
Weight, kg	0.16	
Material	ABS plastic	

Dimensional and installation specifications

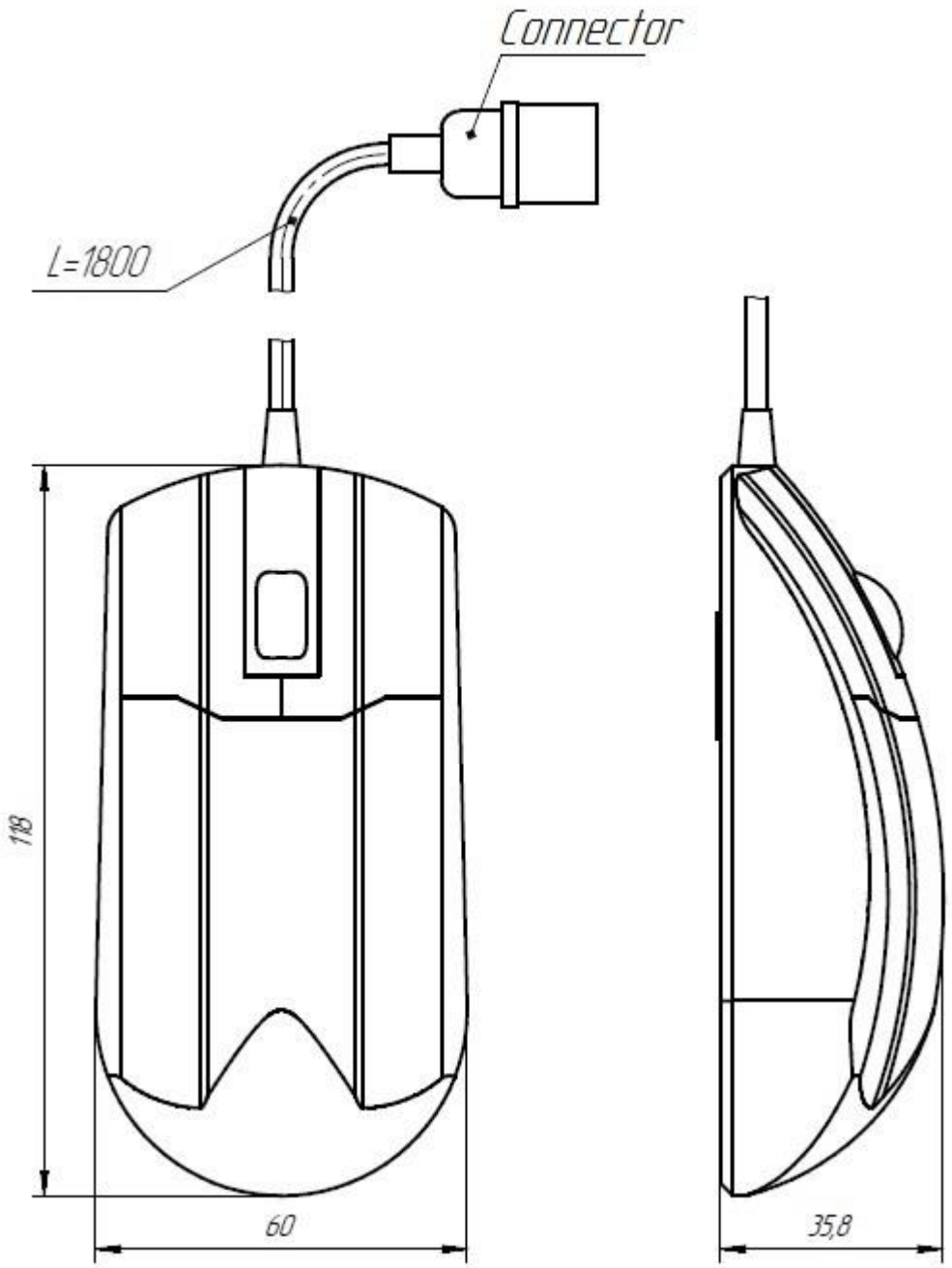

FOR NOTES